POINT LIGHTING CORPORATION

POINT LIGHTING SPECIFICATION GUIDANCE

PRODUCT MOUNTING DETAILS

OL17
OPTION –BKT

- STANDARD FAA POL
- RIGID MOUNT
- BRACKET MOUNT
- EXPOSED CABLE OR RIGID CONDUIT ENTRY

INCANDESCENT:
POL–20000–R–XXX–34B–BKT

LED:
POL–21004–XF–R–34B–S–BKT

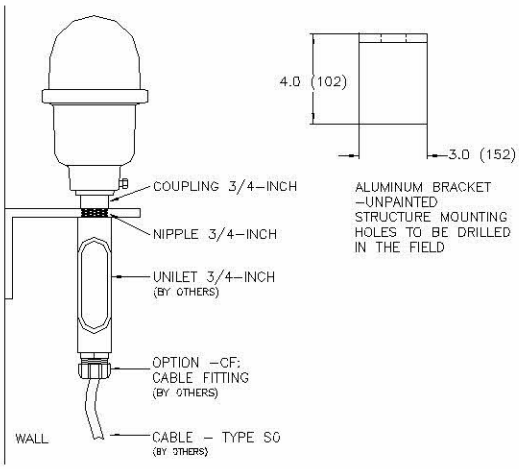

OL18
OPTION –BKT

- STANDARD FAA POL
- RIGID MOUNT
- BRACKET MOUNT
- EXPOSED CABLE ENTRY
- PREWIRED FAA PEC

INCANDESCENT:
POL–20000–R–XXX–10B–S3–P–BKT–CF

LED:
POL–21004–XF–R–10B–S3–P–BKT–CF

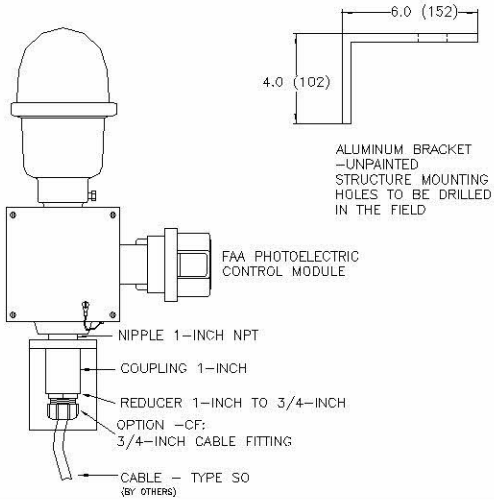

OL19
MOUNTING PATTERN OPTION – FF FLOOR FLANGE

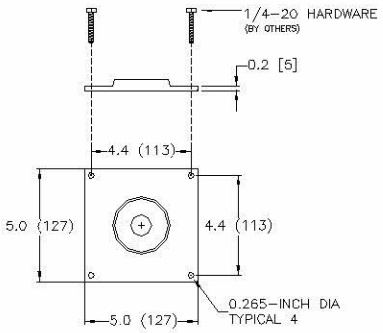

OL20
OBSTRUCTION LIGHT

- FAA L–810 SINGLE LIGHT
- FIXED MOUNT
- SURFACE MOUNTED

INCANDESCENT:
POL–20000–R–116–34B–FF
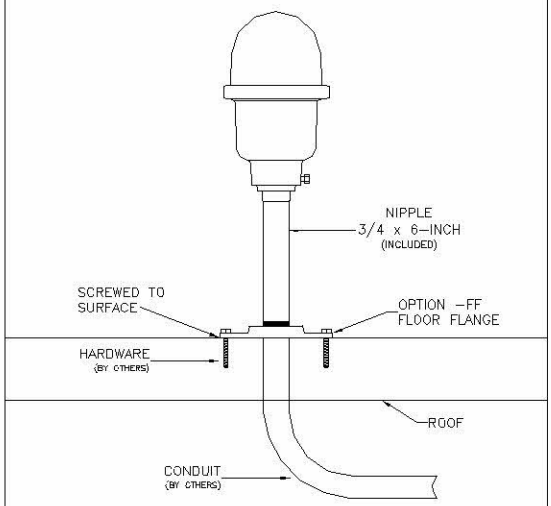
LED:
POL–21004–XF–R–34B–FF