# POINT LIGHTING SPECIFICATION GUIDANCE

## PRODUCT MOUNTING DETAILS

### HELIDECK PERIMETER LIGHT H49

- POINT HELIDECK LIGHT
- SURFACE MOUNTED
- EXPOSED CABLE
- SAFE AREA

LED:
PRL-97004-XC-X-MT-SR-CL*

*AVAILABLE IN LED ONLY

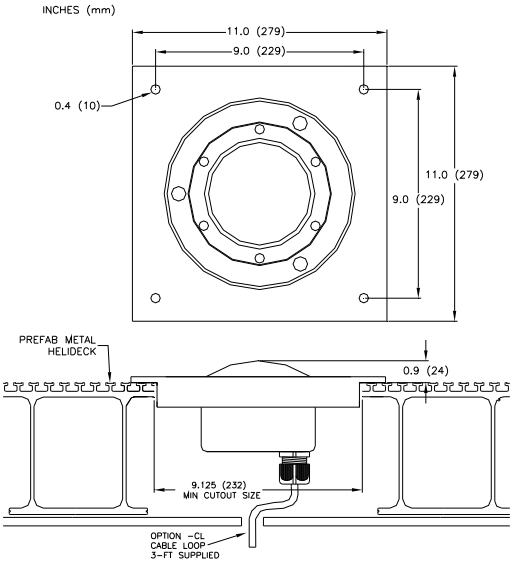


### HELIDECK PERIMETER LIGHT H50

- POINT HELIDECK LIGHT
- SURFACE MOUNTED
- RIGID CONDUIT ENTRY
- HAZARDOUS LOCATIONS

LED:
PRL-97004-XC-X-EX-SR*

*AVAILABLE IN LED ONLY

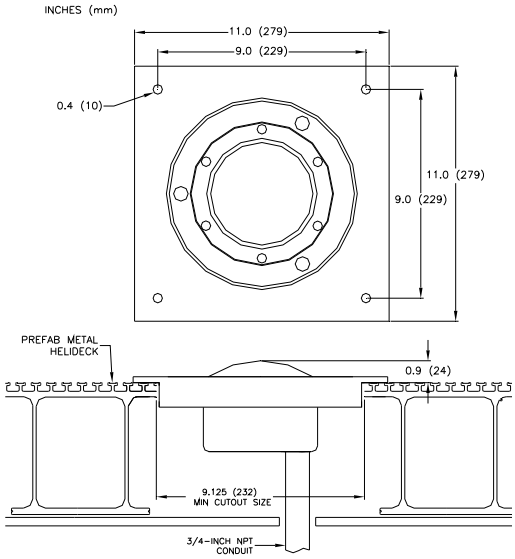


### HELIDECK PERIMETER LIGHT H51

- POINT HELIDECK LIGHT
- SURFACE MOUNTED
- RIGID CONDUIT ENTRY
- STAINLESS STEEL SEATING RING

PRL-97004-XC-X-PLB-SR
PRL-97004-XC-X-EX-PLB-SR
PRL-97004-XC-X-AX-PLB-SR

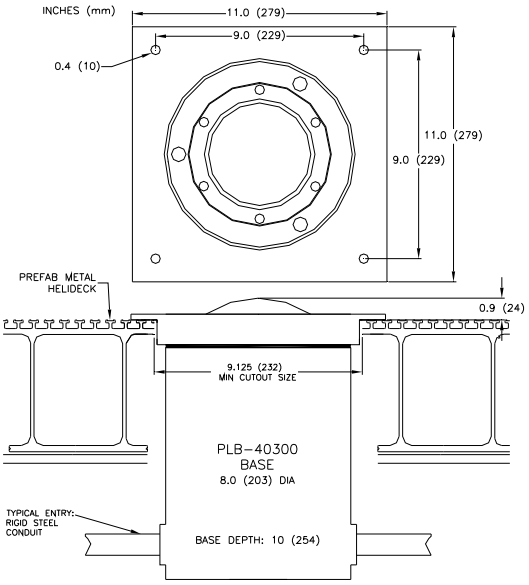


### HELIDECK PERIMETER LIGHT H52

- POINT HELIDECK LIGHT
- SURFACE MOUNTED
- RIGID CONDUIT ENTRY
- STAINLESS STEEL SEATING RING
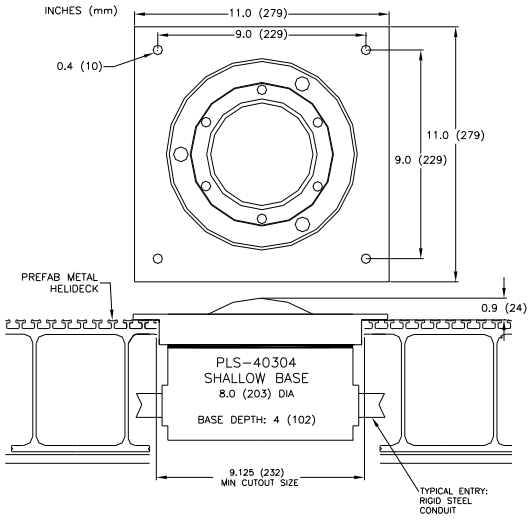
PRL-97004-XC-X-PLS-SR
PRL-97004-XC-X-EX-PLS-SR
PRL-97004-XC-X-AX-PLS-SR