POINT LIGHTING SPECIFICATION GUIDANCE

PRODUCT MOUNTING DETAILS

HELIDECK PERIMETER LIGHT H13

- POINT ROLLOVER LIGHT
- SURFACE MOUNTED
- PLS MOUNTED
- RIGID CONDUIT ENTRY

LED:
PRL-97704-XC-X-PLS-MT
PRL-97704-XC-X-AX-PLS
PRL-97704-XC-X-EX-PLS
*AVAILABLE IN LED ONLY

INCHES (mm)

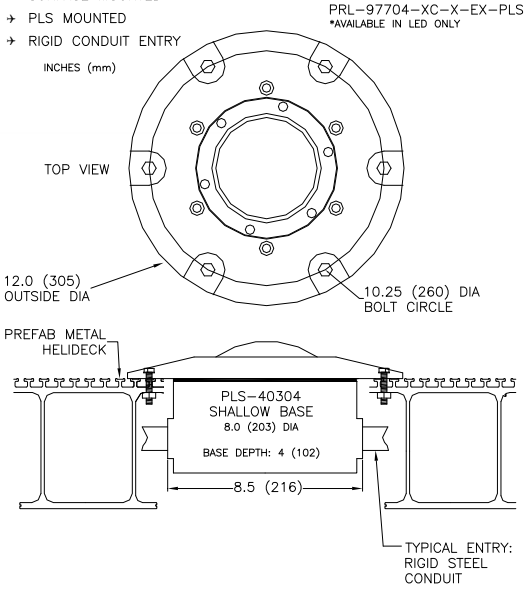

HELIDECK PERIMETER LIGHT H14

- POINT HELIDECK LIGHT
- LOW PROFILE SURFACE MOUNT
- LSM SURFACE BASE
- EXPOSED CABLE OR RIGID CONDUIT ENTRY

LED:
PRL-97004-XC-X-LSM-MT
PRL-97004-XC-X-AX-LSM
PRL-97004-XC-X-EX-LSM

INCHES (mm)

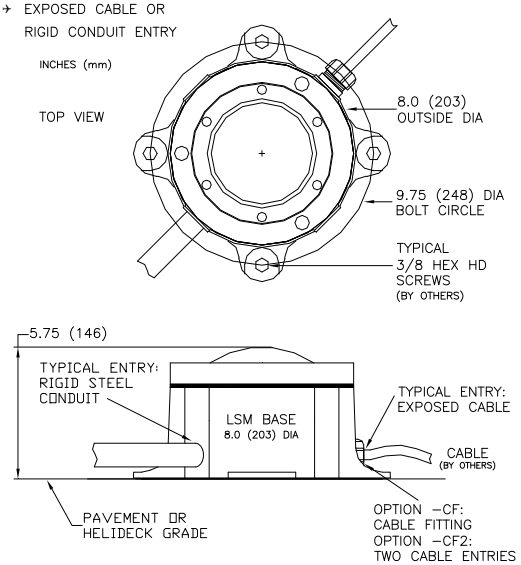

H15

HELIPORT PERIMETER LIGHT

- LOW PROFILE PEL
- RIGID MOUNT
- PARAPET WALL MOUNTED
- EXPOSED CABLE OR RIGID CONDUIT ENTRY

INCANDESCENT:
PEL-50000-X-XXA-JBP3

LED:
PEL-57005-XX-X-JBP3

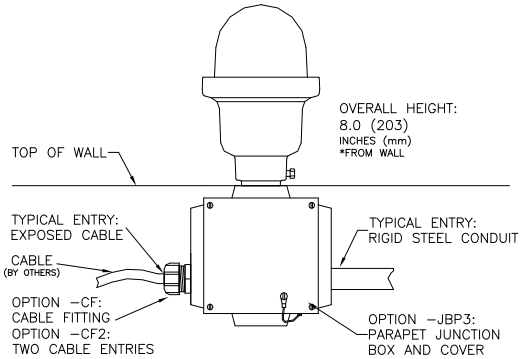

HELIDECK PERIMETER LIGHT H16

- POINT ROLLOVER LIGHT
- SURFACE MOUNTED
- EXPOSED CABLE

LED:
PRL-97704-XC-X-EX
*AVAILABLE IN LED ONLY
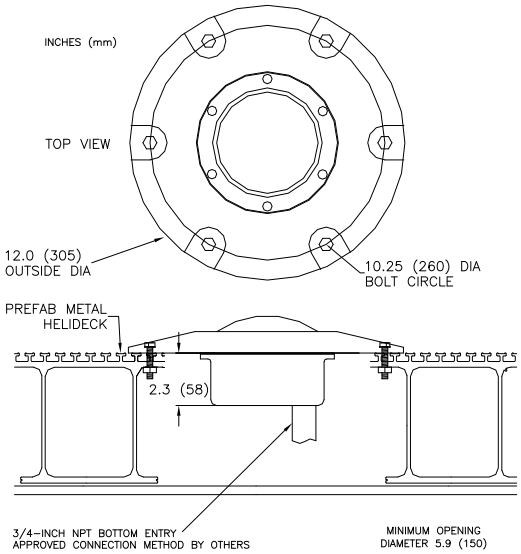
INCHES (mm)