.steute

Ex switchgear

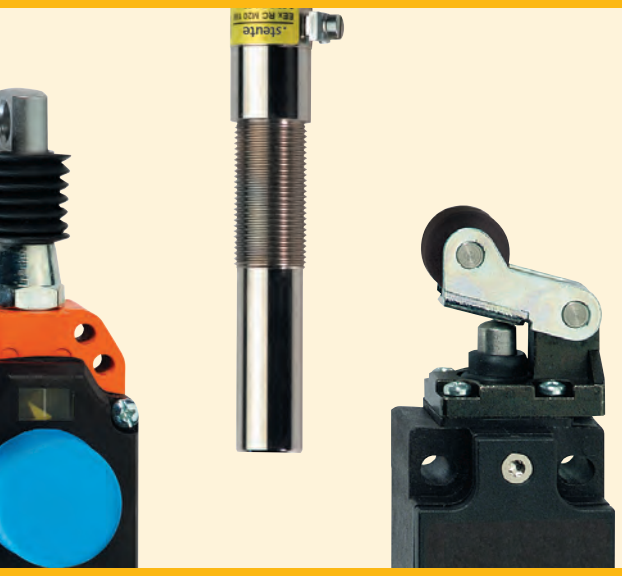

SAFE SWITCHGEAR FOR COMPLEX AND DEMANDING APPLICATIONS

// Explosion protection / Catalogue

PRODUCTS

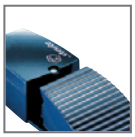

STEUTE SCHALTGERÄTE IN LÖHNE
SAFE SWITCHGEAR FOR COMPLEX AND CRITICAL APPLICATIONS

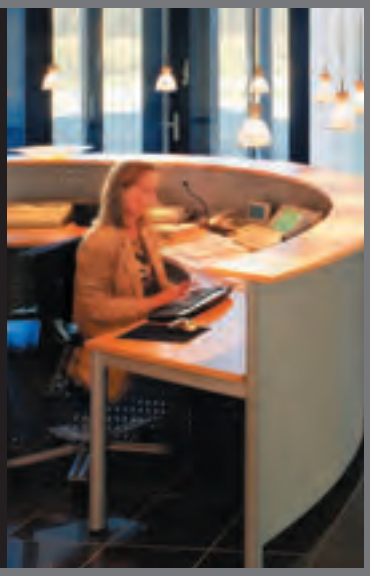

Löhne in Westphalia, Germany. Nestling between the »Wiehengebirge« and the »Teutoburger Wald«, this is the location of steute Schaltgeräte GmbH & Co. KG. Here switchgear is designed and produced for explosion protection, medical technology and control technology. Historians know our region as the area where the Battle of Varus took place in the year 9 AD. About 1700 years later the Treaty of Westphalia marked the end of the 30 Years War. Gourmets love Westphalian sausage, walkers the beautiful landscape. Briefly: it's a good place to live. It's also a good place to work.

The industrial culture of Westphalia is mostly characterised by SME companies; the region is also the home of many unexpected champions and world-market leaders, specialist machine and systems manufacturers, as well as of electronic and connecting technology.

This means we have many important suppliers, customers and partners practically »on our doorstep«. Nevertheless, our employees travel a great deal all over the world. This is because renowned companies in all industrial markets use switchgear by steute when the focus is on high quality and availability. And when they appreciate cooperating with suppliers who can adapt flexibly to their requests.


MÖLLER-WEDEL
ELEKTROTECHN LABORATORIUM
Sicherheitsprüfer
RD 3 L

STEUTE MEETS HIGHEST QUALITY REQUIREMENTS

Today, the company offers a homogenous product range, drawing on its wide know-how and characterised by a high degree of technological synergy.

180 employees attentively develop and manufacture electrical and electronic components for high-standard and explosive safety applications. These applications comply with established international directives, laws, standards and regulations. In this context, key significance is attributed to a close cooperation with technical certification institutions.

With its high standards and specific orientation, steute lives and breathes the following three QM systems

- DIN EN ISO 9001: 2000
- DIN EN ISO 13485: 2003
- Certificate of Quality Assurance acknowledgement in accordance with the 94/9/EG Directive (ATEX)

On the following pages you will find an overview of our wide range of Ex switchgear for safety-related and positioning tasks, each of which can be modified in accordance with customer-specific requirements.

Talk to us. Let us help you find what you are looking for.
The steute team.


steute
Ex

Ex radio switchgear

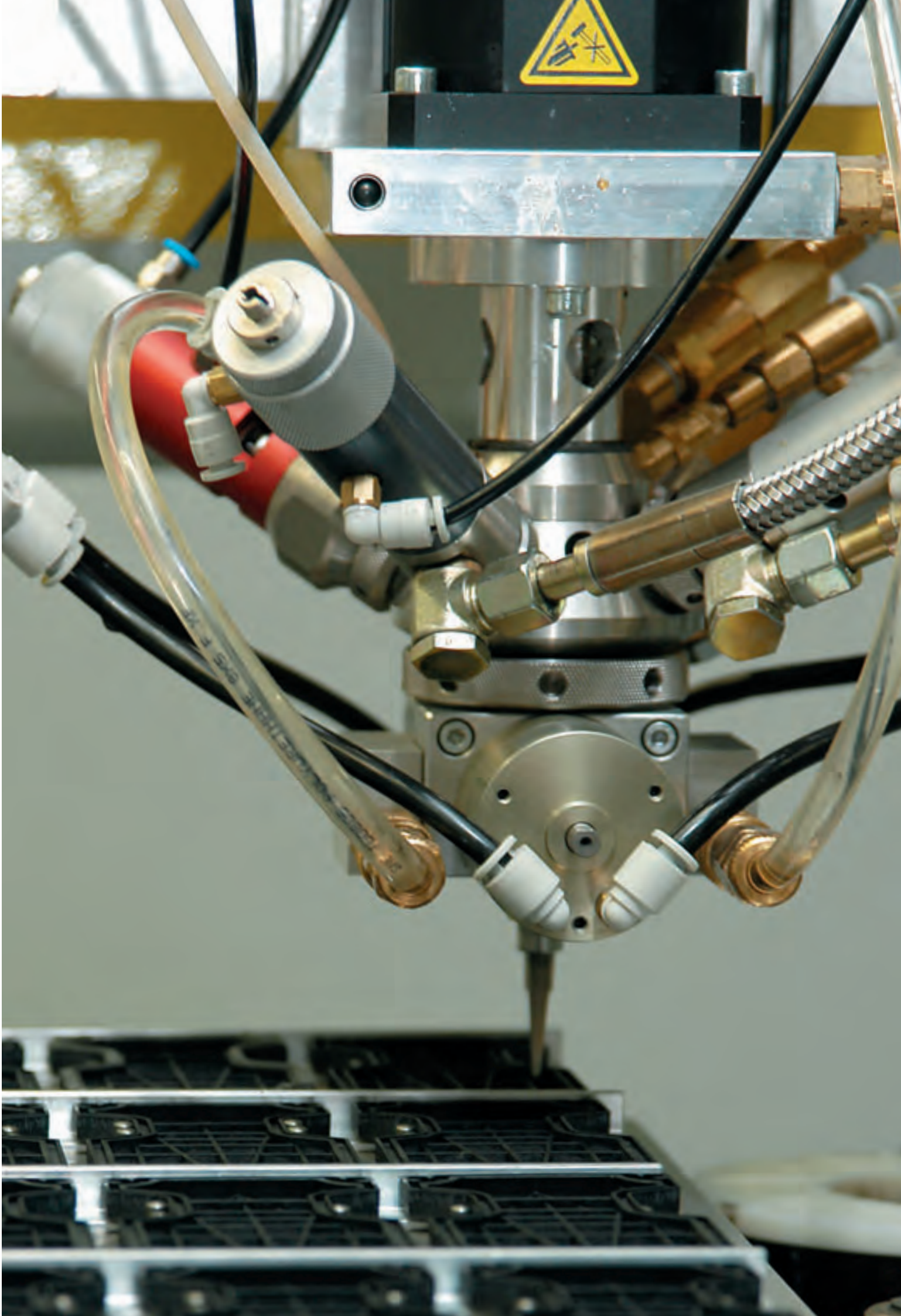

Range of application

These Ex radio switchgear are suitable for the most various indoor and outdoor applications. There are position, pull-wire, foot switches and command devices in different versions available. The radio switchgear can be used for positioning functions, command signals or security tasks in explosive-endangered areas. All applications where wireless is of big advantage. Wireless and self-sufficient switches possess a high potential to optimize the entire machinery and plant industry, e.g. more flexible constructions for movable or self-sufficient plant parts, as well as easier, more favourable installations, especially upgrades. In potentially explosive atmospheres, radio switchgear devices offer particular advantages for every wired connection is a potential risk. The radio switchgear transmits signals wireless and generates the necessary energy itself, according to the »Energy Harvesting« principle. This means: no cable, no connectors, no battery!

The Ex switches are suitable for application in zone 1 and 2, as well as zone 21 and 22 according to ATEX 94/9/EC.

Design and operating principle

The Ex radio switchgear is based on the EnOcean radio technology. The energy required for the radio technology is generated from the a electro-dynamic energy generator. Through this method switchgear can be operated without any batteries. They are self-sufficient and are therefore wireless and maintenance-free. For special cases long-live batteries that have stand-by times of up to 10 years can also be used.

The signal transmission is carried out on the licence-free SRD band (Short Range Devices) at 868 MHz at 10 mW transmission power. On actuation of the switchgear a very short telegram is spontaneously sent out that contains an individual 32 bit identification number and the usable information. The radio signals are processed by receiver units. For example the energy drawn from the actuation of the switch itself. The degree of protection of all the radio switchgear is IP 65/67. The radio switchgear can be fitted in any desired mounting position.

All Ex radio switchgear shown in this chapter bear the CE mark according to ATEX 94/9/EC.

Application

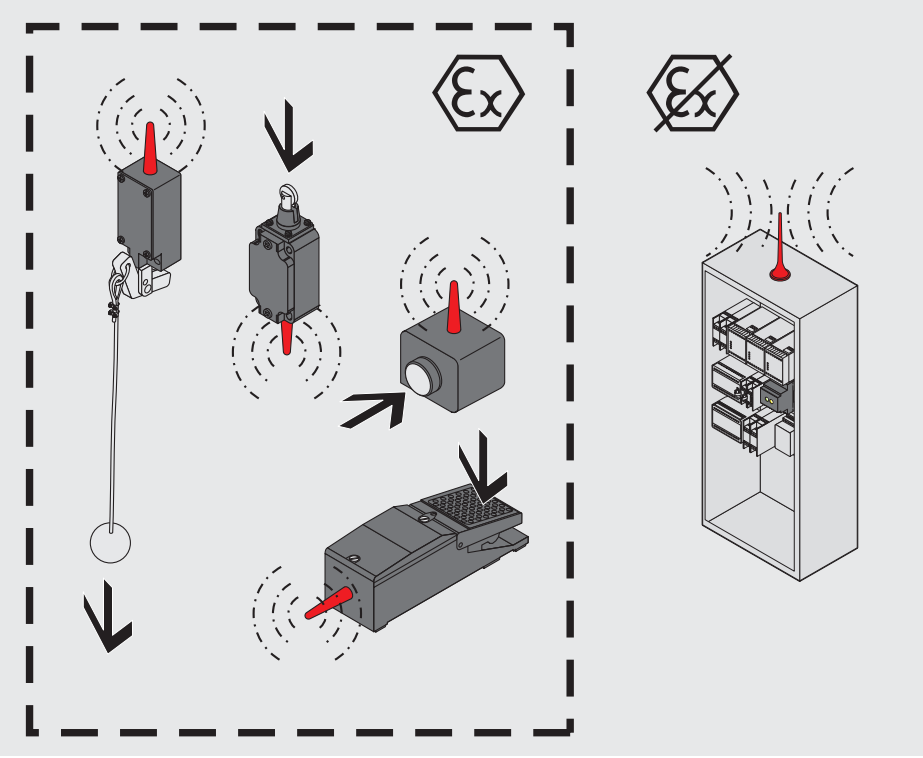

Features/options
- EnOcean standard
- 1-channel: potential-free relay or semi-conductior outputs
- DC version:1 change-over contacts, NPN- or PNP output
  AC version: 1 change-over contacts
- Transmitter/receiver assignment by teaching mode
- LEDs for indication of switching state
- SMA plug-in connector for external antenna
- RF Rx EN868-1-1W 24 VDC order No. 90590001,
  RF Rx EN868-1-PNP 24 VDC order No. 90590003,
  RF Rx EN868-1-NPN 24 VDC order No. 90590002,
  RF Rx EN868-1-1W 24 VAC/DC order No. 90590005

// RF RX EN868-1

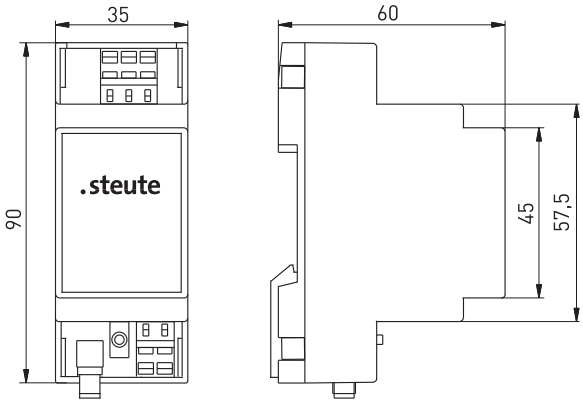

Technical Data

Standards	EN 60947-5-1, EN 61000-6-2, EN 60068-2-6; EN 60068-2-27, EN 301 489-1, EN 301 489-3, EN 300 220-3
Number of channels	1
Mounting	DIN rail mounting
Screw terminals	terminals with CAGE CLAMP WAGO Series 236: 0.08 ... 2.5 mm^2 AWG 28–14 (incl. conductor ferrules)
Degree of protection	IP 20 per EN 60529
Rated operated voltage U_e	Input: 24 VDC -15 % ... +20 %; output: 1 W: 230 VAC; NPN, PNP: U_B-2,5 VDC
Rated operated current I_e	Input: 24 VDC: max. 0.08 A, 24 VAC: max. 0.18 A; output: 1W: 10, NPN, PNP: 0.2 A
Inputs	1 radio channel, max. 10 transmitters per channel
Outputs	1 change-over contact (Relay), NPN or PNP (transistor)
Utilisation category	1 W: AC-15, NPN, PNP: DC-13
Display	green LED for supply voltage, yellow LED for switching conditions
EMC rating	per EMC Directive
Switching frequency	max. 9000 telegrams at repetitions/h
Degree of pollution	2 per DIN VDE 0110
Ambient temperature Ta	0 °C ... +55 °C
Storage and transport-temperature	-25 °C ... +85 °C
Vibration/Shock resistance	per EN 60068-2-6 and EN 60068-2-27
External antenna	always required for optimum sensing range
Note	inductive loads (contactors, relays etc.) are to be suppressed by suitable circuitry.

Arrangement of receiver and switch antenna

Optimum mounting

Possible mounting

Unsuitable mounting

Note
The antenna must be mounted on a metal plate of min. 250 x 250 mm size.

Type code	RF Rx EN868-1-1W

Change-over contact (NPN, PNP transistor output)
1-channel
Radio frequenzy 868 MHz
EnOcean standard
Radio receiver
Radio technology

RF magnet antenna with SMA plug-in connector available as accessory, order No. 01.08.0386.

Mobile field strength indicator EPM 100 for radio field planning is available, order No. 01.08.0267.

Features/options
- Thermoplastic enclosure
- EnOcean standard
- 4-channel: potential-free relay outputs
- 4 change-over contacts, max. 10 A
- Transmitter/receiver assignment by teaching mode
- LEDs for indication of switching state
- 868 MHz frequency band
- 70 mm enclosure
- SMA plug-in connector for external antenna
- RF Rx EN868-4-1W order No. 90590006

// RF RX EN868-4

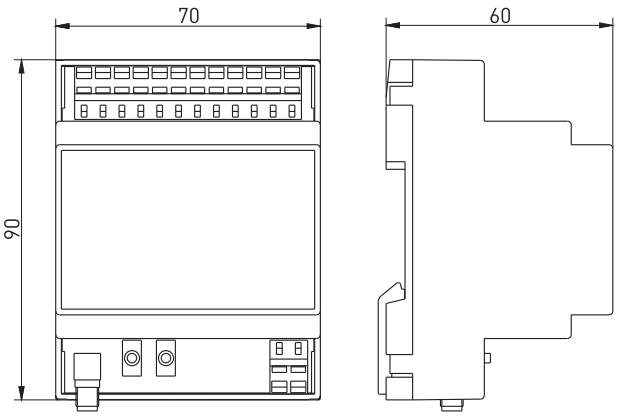

Technical Data

Standards	EN 60947-5-1, EN 61000-6-2, EN 60068-2-6; EN 60068-2-27, EN 301 489-1, EN 301 489-3, EN 300 220-3
Number of channels	4
Mounting	DIN rail mounting
Screw terminals	terminals with CAGE CLAMP WAGO Series 236: 0.08 ... 2.5 mm^2 AWG 28–14 (incl. conductor ferrules)
Degree of protection	IP 20 per EN 60529
Frequency	868.3 MHz
Inputs	4 radio channels, max. 10 transmitters per channel
Outputs	4 change-over contacts (Relays)
Rated operated current I_e	Inputs: 24 VDC: 0.1 A; 24 VAC: max. 0.25 A; outputs: 10 A
Rated operated voltage U_e	Inputs: 24 VDC -15 % ... +10 %; 24 VAC -15 % ... +10 %; outputs: 230 VAC
Utilisation category	AC-15; DC-13
Display	green LED for sypply voltage, yellow LED for switching conditions
EMC rating	per EMC directive
Switching frequency	max. 9000 telegrams repititions/h
Degree of pollution	2 per DIN VDE 0110
Ambient temperature Ta	0 °C ... +55 °C
Storage and transport temperature	-25 °C ... +85 °C
Vibration/shock resistance	per EN 60068-2-6 and EN 60068-2-27
External antenna	always required for optimum sensing range
Note	inductive loads (contactors, relays etc.) are to be suppressed by suitable circuitry.

Arrangement of receiver and switch antenna

Optimum mounting

Possible mounting

Unsuitable mounting

Note
The antenna must be mounted on a metal plate of min. 250 x 250 mm size.

Type code	RF Rx EN868-4

- 4 channels
- Radio frequenzy 868 MHz
- EnOcean standard
- Radio receiver
- Radio technology

RF magnet antenna with SMA plug-in connector available as accessory, order No. 01.08.0386.

Mobile field strength indicator EPM 100 for radio field planning is available, order No. 01.08.0267.

Features/options
- Thermoplastic enclosure
- EnOcean standard
- LEDs for indication of switching state
- 868 MHz frequency band
- 35 mm enclosure
- SMA plug-in connector for external antenna
- RF RxT EN868-1K order No. 90590004

// RF RXT EN868-1K

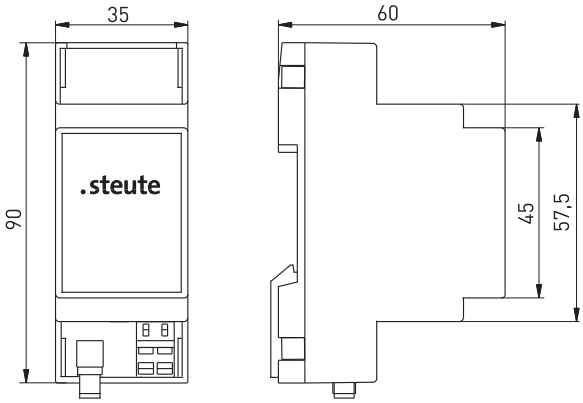

Technical Data

Standards	EN 60947-5-1, EN 61000-6-2, EN 60068-2-6; EN 60068-2-27, EN 301 489-1, EN 301 489-3, EN 300 220-3
Number of channels	1
Mounting	DIN rail mounting
Screw terminals	terminals with CAGE CLAMP WAGO Series 236: 0.08 ... 2.5 mm² AWG 28–14 (incl. conductor ferrules)
Degree of protection	IP 20 per EN 60529
Rated operating voltage U_e	24 VDC -15 % ... +20 %
Rated operating current I_e	max. 0.08 A
Input (transistor)	1 radio channel
Frequency	868.3 MHz
EMC rating	per EMC Directive
Switching frequency	max. 9000 telegrams at repetitions/h
Degree of pollution	2 per DIN VDE 0110
Ambient temperature Ta	0 °C ... +55 °C
Storage and transport-temperature	-25 °C ... +85 °C
Vibration/Shock resistance	per EN 60068-2-6 and EN 60068-2-27
External antenna	always required for optimum sensing range

Arrangement of receiver and switch antenna

Optimum mounting

Possible mounting

Unsuitable mounting

Note
The antenna must be mounted on a metal plate of min. 250 x 250 mm size.

Type code	RF RxT EN868-1K

1-channel, simple cascading
Radio frequenzy 868 MHz
EnOcean standard
Radio repeater
Radio technology

RF magnet antenna with SMA plug-in connector available as accessory, order No. 01.08.0386.

Mobile field strength indicator EPM 100 for radio field planning is available, order No. 01.08.0267.

MOULDING OF DOOR HANDLE SWITCHES

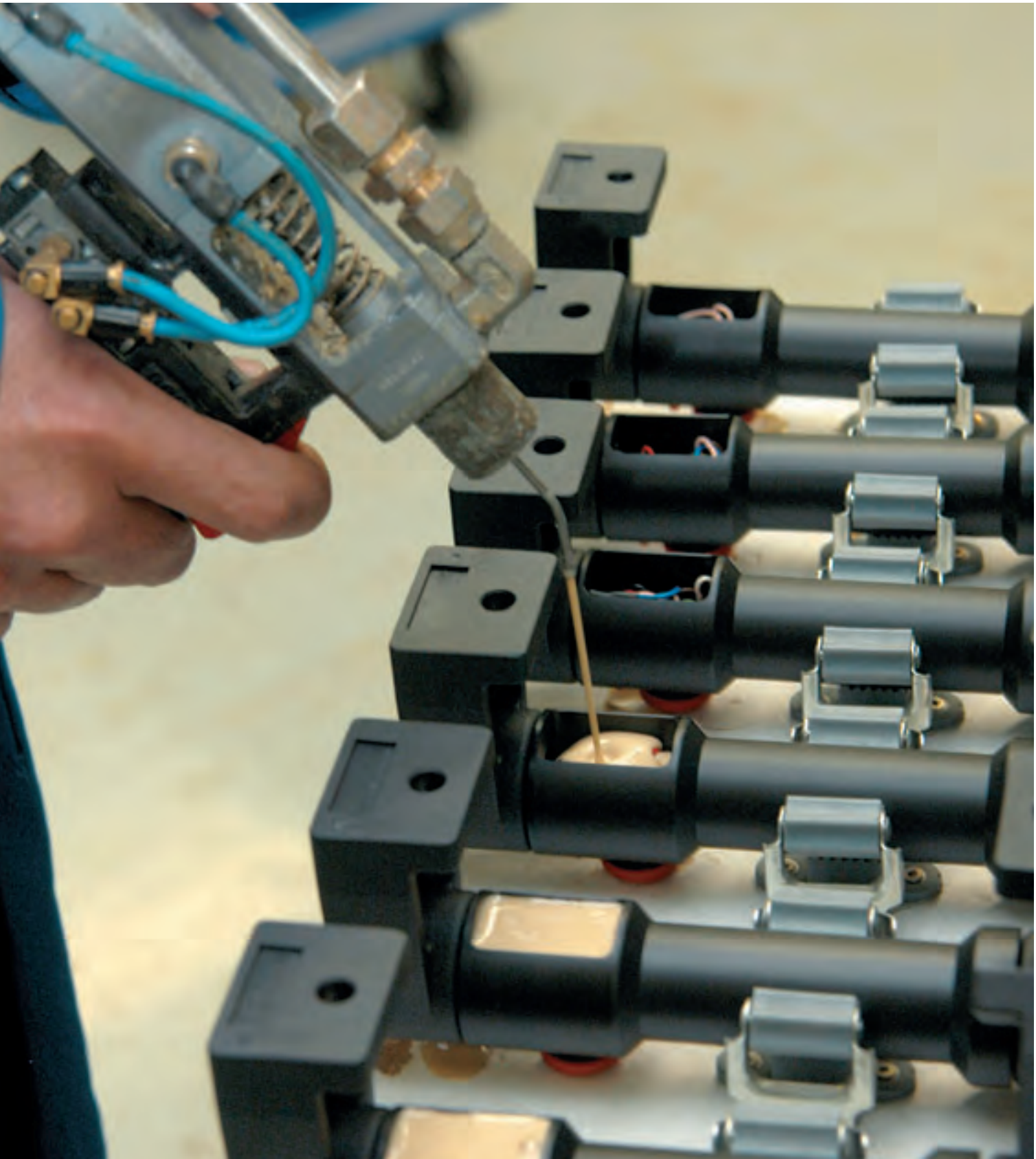

Ex radio position switches
// Series Ex RF 95

Features/options
- Ex zone 1 and 2, as well as 21 and 22
- Thermoplastic enclosure
- Transversely slotted mounting holes
- To EN 50 047
- Output signal can be individually configurated at the receiver
- EnOcean-protocol
- Data rate 120 kbps
- No power supply, no wiring and pipe laying required
- Multi-network capable
- Easy programming of receiver

// EX RF 95

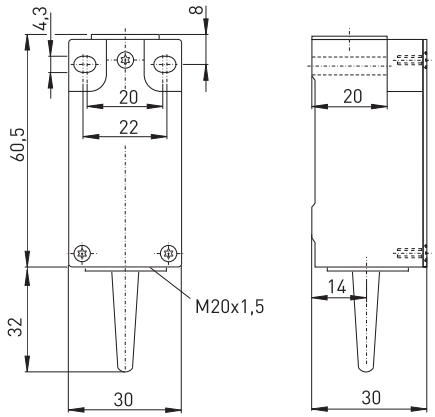

Technical Data

Standards	EN 60947-5-1, EN 61000-6-2, EN 301 489-1, EN 301 489-3, EN 300 220-3; EN 60079-0, EN 60079-11, EN 61241-11
Enclosure	Glassfibre reinforced thermoplastic, self-extinguishing UL 94-V0
Cover	Glassfibre reinforced thermoplastic, self-extinguishing UL 94-V0
Degree of protection	IP 67 per EN 60529
Protocol	EnOcean
Ambient temperature Ta	–20 °C ... +65 °C
Switching frequency	approx. 6000 telegrams at repetitions/h
Voltage supply	Electrodynamic energy generator
Frequency	868.3 MHz
Transmission power	max. 10 mW
Data rate	120 kbps
Channel bandwidth	280 kHz
Sensing range	max. 300 m outside, max. 30 m inside
Actuating time	min. 80 ms
Mechanical life	> 1 million operations
Note	no presence signal available
Ex marking	Ⓔx II 2G Ex ib IIC T6 Gb, II 2D Ex ib IIIC T80°C Db; IECEx Ex ib IIC T6 Gb, Ex ib IIIC T80°C Db
Approvals	BVS 08 ATEX E111; IECEx BVS 08.0048

Type code	Ex RF 95 WR EN868

Radio frequenzy 868 MHz
EnOcean standard
Actuator R (H, D, DS, etc. ...)
Watertight collar
Series
Radio technology
Ex certified component

Ex radio position switches
// Series Ex RF 95, actuators

Features/options

Plunger W
- Actuator type B per DIN EN 50 047
- Ex RF 95 W EN868 order No. 95902301

Roller plunger R/ long roller plunger RL
- R: actuator type C per DIN EN 50 047
- Ex RF 95 R order No. 95909301
- Ex RF 95 RL order No. 95911301

Cap WK
- Suitable for manual actuation
- Ex RF 95 WK EN868 order No. 95908901

Offset roller lever WH/WHM
- Actuator type E per DIN EN 50 047
- WH: thermoplastic lever, WHM: metal lever
- Ex RF 95 WH EN868 order No. 95914301
- Ex RF 95 WHM EN868 order No. 95914303

// Plunger W

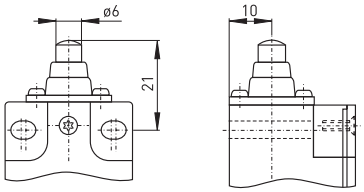

// Cap WK

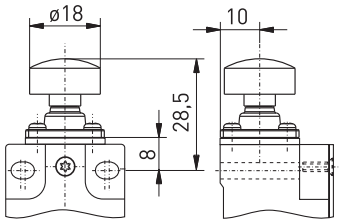

// Roller plunger R

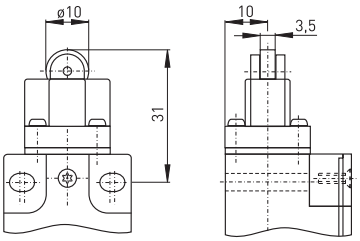

// Long Roller plunger RL

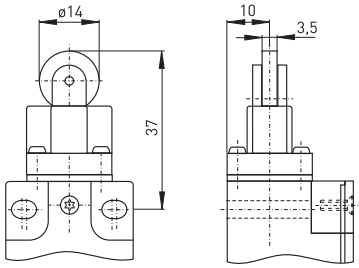

// Roller lever WH

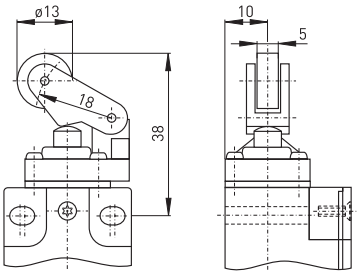

// Metal roller lever WHM

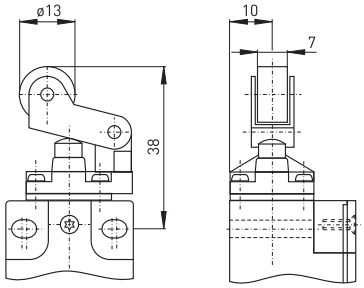

Ex radio position switches
// Series Ex RF 95, actuators

Features/options

Long metal roller lever WHLM
- Ex RF 95 WHLM EN868 order No. 95916301

Thermoplastic roller lever 4K
- Ex RF 95 4K EN868 order No. 95964301

Parallel roller lever WPH/WPHM
- WPH: thermoplastic lever,
  Ex RF 95 WPH EN868 order No. 95920301
  WPHM: metal lever,
  Ex RF 95 WPHM EN868 order No. 95920302

Rocking offset roller lever WHKM
- Actuation only possible from right,
  free movement of actuator from left
- Ex RF 95 WHKM EN868 order No. 95918301

Rocking lever D
- Ex RF 95 D EN868 order No. 95921301

// Long metal roller lever WHLM

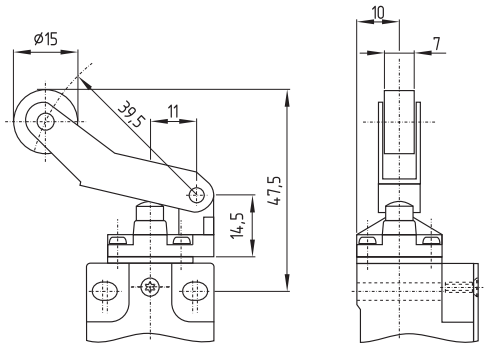

// Thermoplastic roller lever 4K

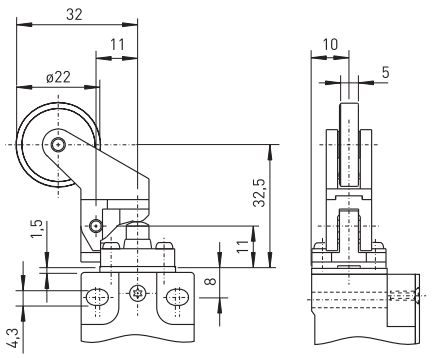

// Parallel roller lever WPH

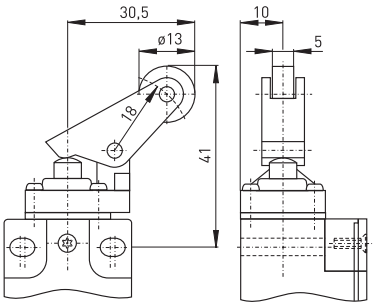

// Metal parallel roller lever WPHM

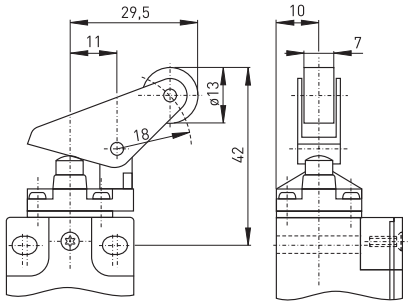

// Rocking offset roller lever WHKM

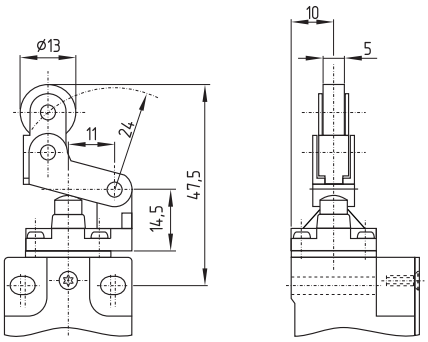

// Rocking roller lever D

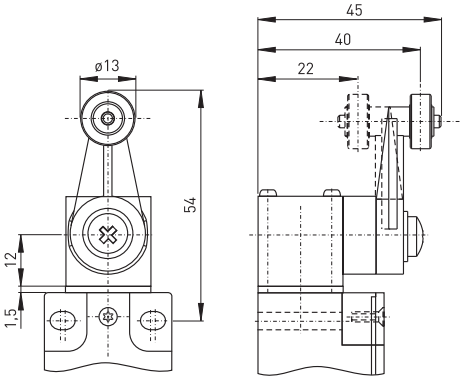

Features/options

Adjustable rocking lever DS
- Position of roller can be adjusted
- Wear-resistant thermoplastic roller
- Actuator can be repositioned by 4 x 90°
- Metal roller available on request
- Ex RF 95 DS EN868 order No. 95929301

Spring-rod lever DF/rod lever DD
- Lever angle adjustable in 10° steps
- Actuator can be repositioned by 4 x 90°
- Ex RF 95 DF EN868 order No. 95927301
- Ex RF 95 DD EN868 order No. 95925301

// Adjustable rocking lever DS

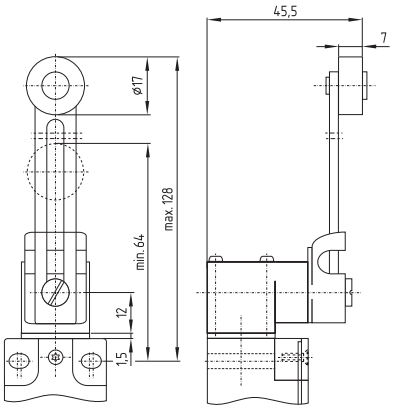

// Spring-rod lever DF

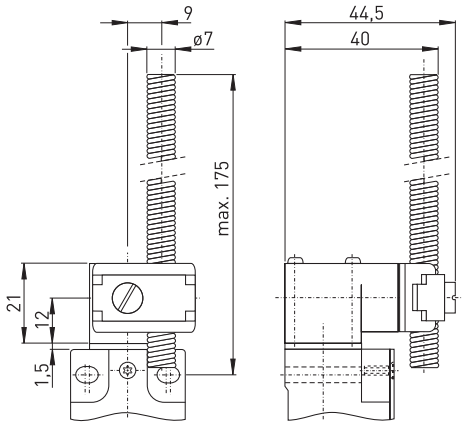

// Rod lever DD

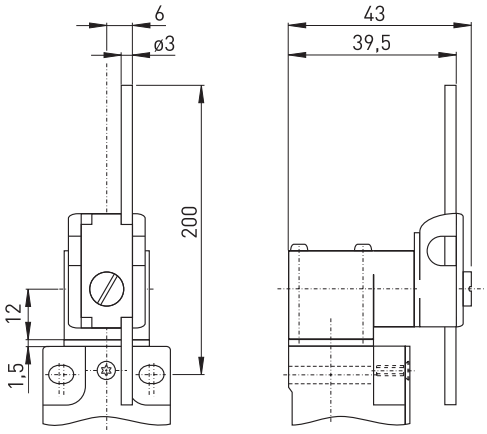

Ex radio position switches
// Series Ex RF 335

Features/options
- Ex zone 1 and 2, as well as 21 and 22
- Metal enclosure
- To EN 50041
- Output signal can be individually configurated at the receiver
- EnOcean-protocol
- Data rate 120 kbps
- No power supply, no wiring and pipe laying required
- Multi-network capable
- Easy programming of receiver

// EX RF 335

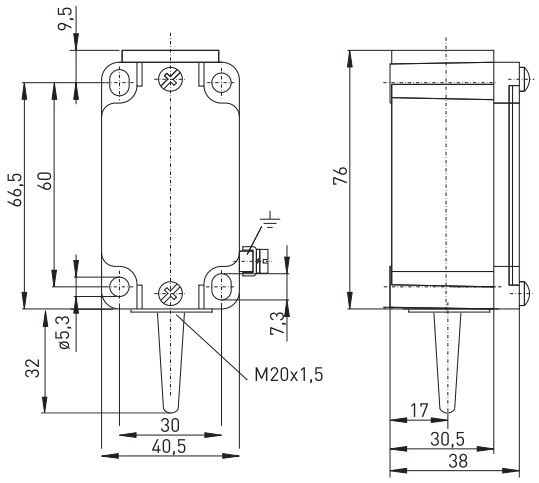

Technical Data

Standards	EN 60947-5-1, EN 61000-6-2, EN 301 489-1, EN 301 489-3, EN 300 220-3; EN 60079-0, EN 60079-11, EN 61241-11
Enclosure	Zinc die-cast, enamelled
Cover	steel, enamelled
Degree of protection	IP 67 per EN 60529
Protocol	EnOcean
Ambient temperature Ta	–20 °C ... +60 °C
Switching frequency	approx. 6000 telegrams at repetitions/h
Voltage supply	Electrodynamic energy generator
Frequency	868.3 MHz
Transmission power	max. 10 mW
Data rate	120 kbps
Bandwidth channel	280 kHz
Sensing range	max. 300 m outside, max. 30 m inside
Actuating time	min. 80 ms
Mechanical life	> 1 million operations
Note	no presence signal available
Ex marking	Ⓔx II 2G Ex ib IIC T6 Gb, II 2D Ex ib IIIC T80°C Db; IECEx Ex ib IIC T6 Gb, Ex ib IIIC T80°C Db
Approvals	BVS 09 ATEX E 003; IECEx BVS 09.0001

Type code	Ex RF 335 S EN868

Radio frequenzy 868 MHz
EnOcean standard
Actuator R (S, 1 K, 3 K etc. ...)
Series
Radio technology
Ex certified component

Ex radio position switches
// Series Ex RF 335, actuators

Features/options

Plunger S
- Actuator type B to DIN EN 50 041
- Ex RF 335 S EN868 order No. 93901301

Roller plunger R
- Actuator type C to DIN EN 50 041
- Ex RF 335 R EN868 order No. 93909301

Roller lever 1K
- Actuation parallel to switch from right, not from left side!
- Ex RF 335 1K EN868 o.No. 93913301

Angled roller lever 3K
- Actuation parallel to switch from below
- Ex RF 335 3K EN868 order No. 93919301

Rocking roller lever 4VH
- Actuator type A to DIN EN 50 041
- Ex RF 335 4VH EN868 order No. 93921301

Long rocking roller lever 4V3H
- Ex RF 335 4V3H EN868 order No. 93923301

// Plunger S

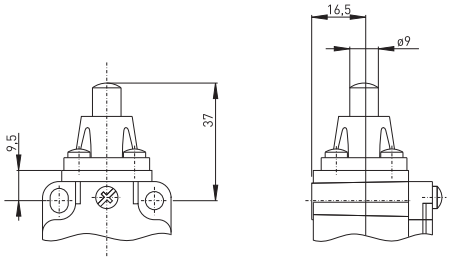

// Roller plunger R

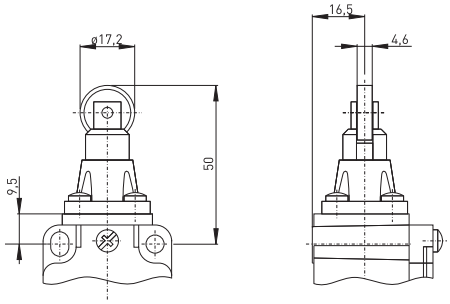

// Roller lever 1K

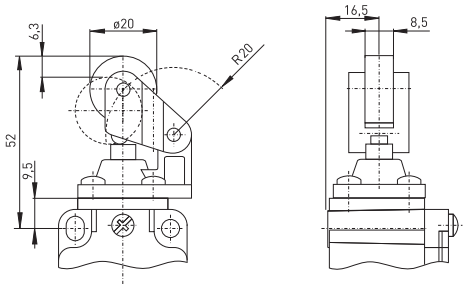

// Angled roller lever 3K

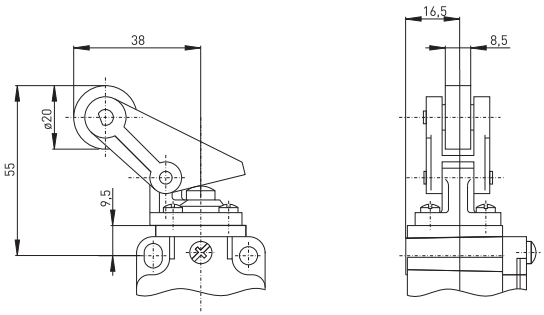

// Rocking roller lever 4VH

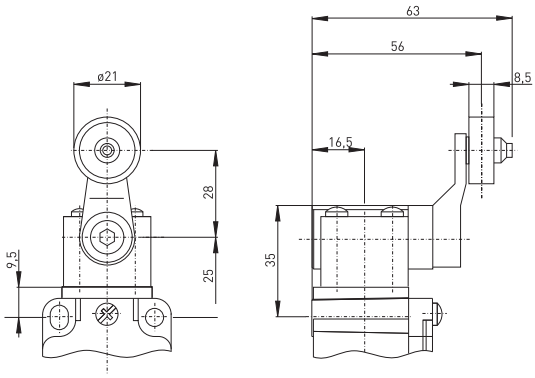

// Long rocking roller lever 4V3H

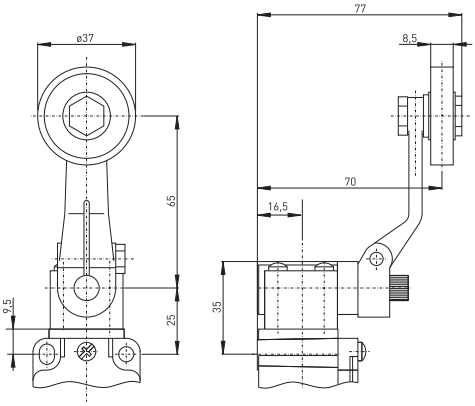

Ex radio position switches
// Series Ex RF 335, actuators

Merkmale/Optionen

Adjustable rocking roller lever 4V7H
- Thermoplastic roller, actuator head can be repositioned by 4 x 90°
- Ex RF 335 4V7H EN868 order No. 93929301

Forked lever latching 3V4D
- Thermoplastic roller, actuator head can be repositioned by 4 x 90°
- Ex RF 335 3V4D EN868 order No. 93967301

Rod lever 4V10H
- Actuator type D to EN 50041
- Ex RF 335 4V10H EN868 order No. 93925301

// Adjustable rocking lever 4V7H

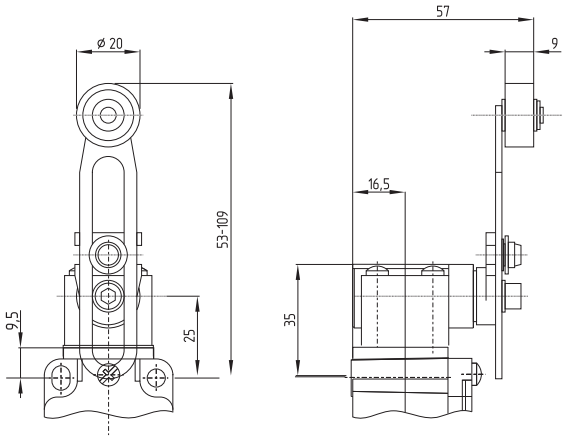

// Forked lever latching 3V4D

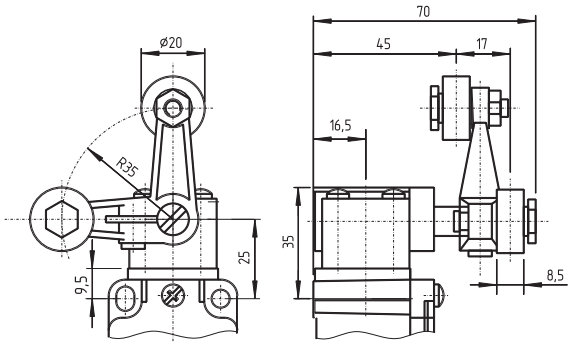

// Rod lever 4V10H

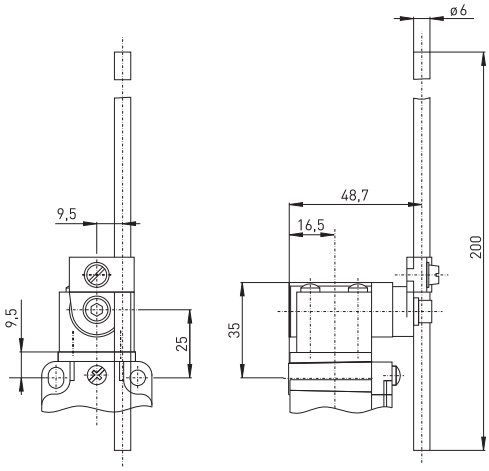


07.17.11

Ex radio command devices
// Series Ex RF BF 80

Features/options
- Ex zone 1 and 2, as well as 21 and 22
- Polyester resin enclosure
- Output signal can be individually configured at the receiver
- EnOcean-protocol
- Data rate 120 kbps
- No power supply, no wiring and pipe laying required
- Multi-network capable
- Easy programming of receiver

// EX RF BF 80

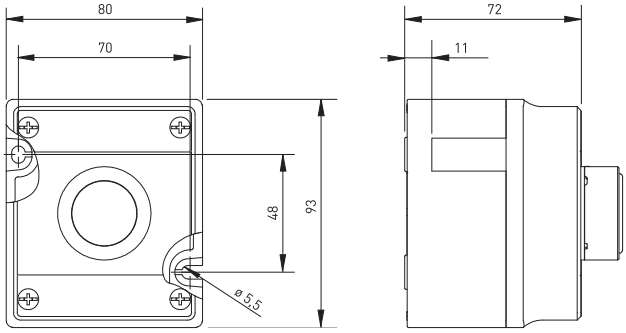

Technical Data

Standards	EN 60947-5-1; EN 60079-0, EN 60079-11; EN 61241-0, EN 61241-11
Enclosure	Polyester resin (glass fibre-reinforced)
Degree of protection	IP 66 per EN 60529
Protocol	EnOcean
Ambient temperature Ta	– 20 °C ... + 60 °C
Switching frequency	approx. 6000 telegrams at repetitions/h
Voltage supply	Electrodynamic energy generator
Frequency	868.3 MHz
Transmission power	max. 10 mW
Data rate	120 kbps
Bandwidth channel	280 kHz
Sensing range	max. 300 m outside, max. 30 m inside
Actuating time	min. 80 ms
Mech. life	> 1 million operations
Note	no presence signal avaiable
Ex marking	Ⓔx II 2G Ex ib IIC T6 Gb, II 2D Ex ib IIIC T80°C Db IECEx Ex ib IIC T6 Gb, Ex ib IIIC T80°C Db
Approval	BVS 10 ATEX E 075, IECEx in 2010

Type code Ex RF BF 80 3 DT/DT/DT EN868

- 868 MHz radio frequency
- EnOcean standard
- Actuator DT (different push-buttons, selector, key switches available)
- 3 enclosure (1=single, 2=double, 3=triple)
- Series
- Command device
- Radio technology
- Ex certified component

Ex radio command devices
// Series Ex RF BF 80, actuators

Features/options
Pushbutton DT
- Ex RF BF 80 1 DT EN868 order No. 6810013101
- Ex RF BF 80 2 DT/DT EN868 order No. 6820223101
- Ex RF BF 80 3 DT/DT/DT EN868 order No. 6830253101

Note
Further actuators like selector or key switch available on request

// 2 Push-buttons

// 2 Push-buttons

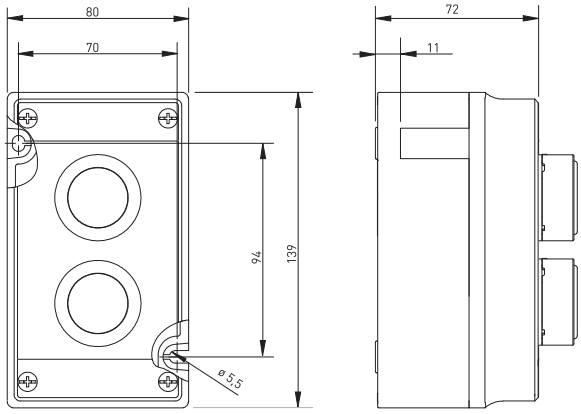

// 3 Push-buttons

// 3 Push-buttons

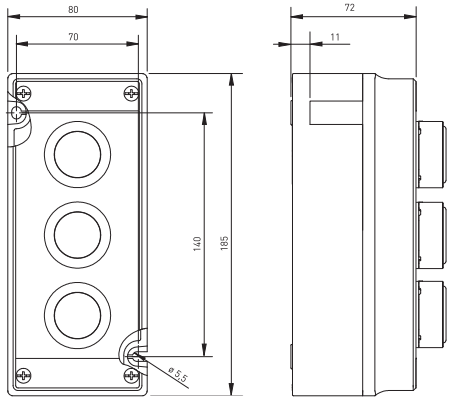

// Selector switch WS

// Key switch SLS

Features/options
- Ex zone 1 and 2, as well as 21 and 22
- Thermoplastic enclosure
- Mountings to EN 50 047
- Output signal can be individually configurated at the receiver
- Data rate 120 kbps
- No power supply, no wiring and pipe laying required
- Multi-network capable
- Easy programming of receiver

// EX RF 95 RS SW

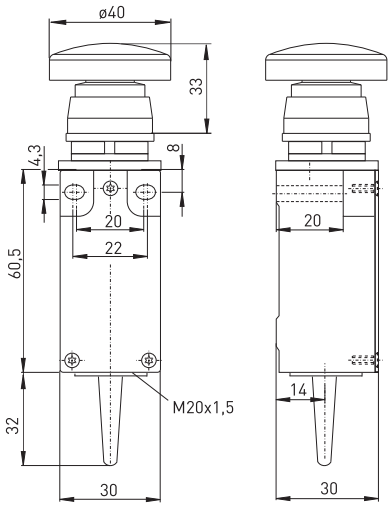

Technical Data

Standards	EN 60947-5-1, EN 61000-6-2, EN 301 489-1, EN 301 489-3, EN 300 220-3; EN 60079-0, EN 60079-11, EN 61241-11
Enclosure	Glassfibre reinforced thermoplastic, self-extinguishing UL 94-V0
Cover	Glassfibre reinforced thermoplastic, self-extinguishing UL 94-V0
Degree of protection	IP 65 per EN 60529
Protocol	EnOcean
Ambient temperature Ta	– 20 °C ... + 60 °C
Switching frequency	approx. 6000 telegrams at repetitions/h
Voltage supply	Electrodynamic energy generator
Frequency	868.3 MHz
Transmission power	max. 10 mW
Data rate	120 kbps
Bandwidth channel	280 kHz
Sensing range	max. 300 m outside, max. 30 m inside
Actuating time	min. 80 ms
Mechanical life	> 1 million operations
Note	no presence signal avaiable
Ex marking	Ⓔx II 2G Ex ib IIC T6 Gb, II 2D Ex ib IIIC T80°C Db IECEx Ex ib IIC T6 Gb, Ex ib IIIC T80°C Db
Approvals	BVS 08 ATEX E111; IECEx BVS 08.0048

Type code	Ex RF 95 RS SW EN868

868 MHz radio frequency
EnOcean standard
Actuator RS SW (different push-buttons available)
Series
Radio technology
Ex certified component

Ex radio command devices
// Series Ex RF 95, actuators

Features/options
- IP 67 for actuators with diaphragm
- Available with actuator made of stainless steel

Pushbutton RT
- Ex RF 95 RT EN868 order No. 95955303

Control switch RST
- RST with spring return
- Ex RF 95 RSTA 0<–I EN868 order No. 95957301

Key switch RSSA
- RSSA key switch with safety cylinder lock (locks against turning)
- Standard version always has same key number
- Ex RF 95 RSSA 14 EN868 order No. 95958301

Selector switch RW
- Ex RF 95 RWA 0–I EN868 order No. 95957302

Pushbutton RS SW
- Ex RF 95 RS SW EN868 order No. 95955301

// Push-button RT

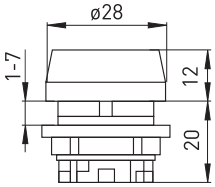

// Control switch RST

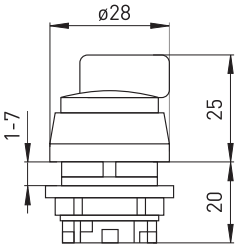

// Key switch RSSA

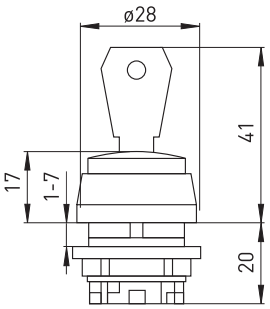

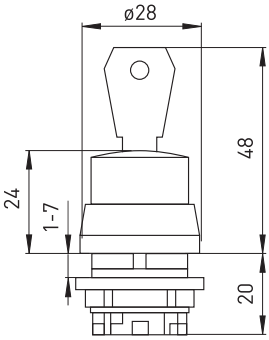

// Selector switch RW

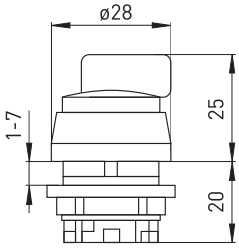

// Push-button RS SW

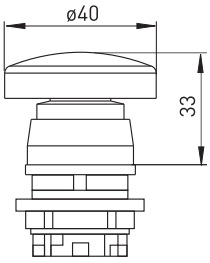

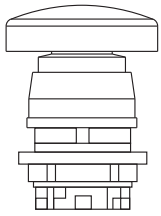

Ex radio pull-wire switch
// Series Ex RF 95 WH/90°

Features/options
- Ex zone 1 and 2, as well as 21 and 22
- Thermoplastic enclosure
- Transversely slotted mounting holes
- To EN 50 047
- Output signal can be individually configurated at the receiver
- Data rate 120 kbps
- No power supply, no wiring and pipe laying required
- Multi-network capable
- Easy programming of receiver
- Ex RF 95 WH/90° EN868 order No. 95914302

// EX RF 95 WH/90°

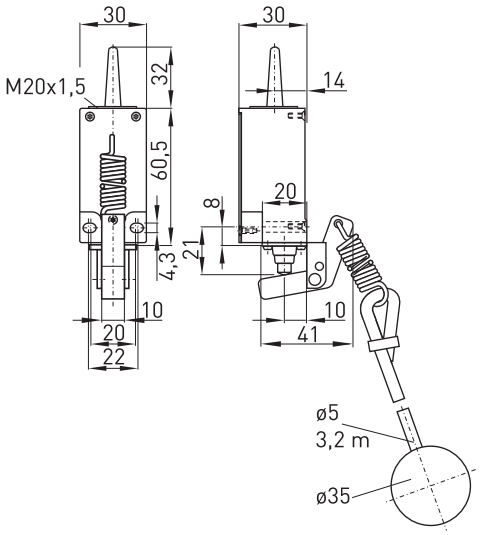

Technical Data

Standards	EN 60947-5-1, EN 61000-6-2, EN 301 489-1, EN 301 489-3, EN 300 220-3; EN 60079-0, EN 60079-11, EN 61241-11
Enclosure	Glassfibre reinforced thermoplastic, self-extinguishing UL 94-V0
Cover	Glassfibre reinforced thermoplastic, self-extinguishing UL 94-V0
Degree of protection	IP 67 per EN 60529
Protocol	EnOcean
Ambient temperature Ta	–20 °C ... +60 °C
Switching frequency	approx. 6000 telegrams at repetitions/h
Voltage supply	Electrodynamic energy generator
Frequency	868.3 MHz
Transmission power	max. 10 mW
Data rate	120 kbps
Bandwidth channel	280 kHz
Sensing range	max. 300 m outside, max. 30 m inside
Actuating time	min. 80 ms
Note	no presence signal available
Ex marking	Ⓔx II 2G Ex ib IIC T6 Gb, II 2D Ex ib IIIC T80°C Db; IECEx Ex ib IIC T6 Gb, Ex ib IIIC T80°C Db
Approvals	BVS 08 ATEX E 111; IECEx BVS 08.0048

Type code	Ex RF 95 WH/90° EN868

868 MHz radio frequency
EnOcean standard
Actuator H/90°
Watertight collar
Series
Radio technology
Ex certified component

VERIFICATION OF DIMENSION OF DELIVERED COMPONENTS

Ex radio foot switches
// Series Ex RF GFI

Features/options
- Ex zone 1 and 2, as well as 21 and 22
- Metal enclosure
- Available with special finish in RAL colour tones
- Data rate 120 kbps
- No power supply, no wiring and pipe laying required
- Multi-network capable
- Easy programming of receiver
- Ex RF GFI EN868 order No. 53191201

// EX RF GFI

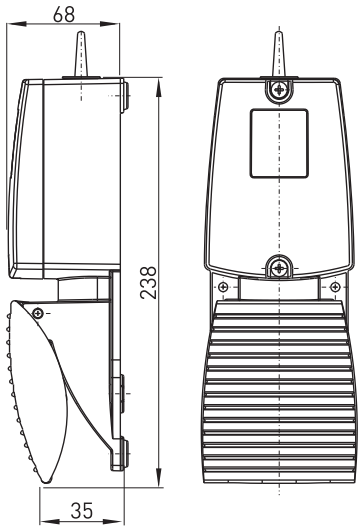

Technical Data

Standards	EN 60947-5-1, EN 61000-6-2, EN 301 489-1, EN 301 489-3, EN 300 220-3; EN 60079-0, EN 60079-11, EN 61241-0, EN 61241-11
Enclosure	aluminium die-cast, enamel finish, RAL 5011
Cover	aluminium die-cast, enamel finish, RAL 2004
Pedal	aluminium die-cast, enamel finish, RAL 5011
Protective shield	–
Degree of protection	IP 67 per EN 60529
Protocol	EnOcean
Ambient temperature Ta	-20 °C ... +60 °C
Switching frequency	approx. 6000 telegrams at repetitions/h
Voltage supply	Electrodynamic energy generator
Frequency	868.3 MHz
Transmission power	max. 10 mW
Data rate	120 kbps
Bandwidth channel	280 kHz
Sensing range	max. 300 m outside, max. 30 m inside
Actuating time	min. 80 ms
Mechanical life	> 1 million operations
Note	no presence signal available
Ex marking	Ⓔx II 2G Ex ib IIC T6, II 2D Ex ibD 21 T80°C
Approvals	BVS 09 ATEX E149, IECEx in 2011

Type code	Ex RF GFI EN868

868 MHz radio frequency
EnOcean standard
Series
Radio technology
Ex certified component

Features/options
- Ex zone 1 and 2, as well as 21 and 22
- Metal enclosure
- Available with special finish in RAL colour tones
- Data rate 120 kbps
- No power supply, no wiring and pipe laying required
- Multi-network capable
- Easy programming of receiver
- Ex RF GFSI EN868 order No. 53291201

// EX RF GFSI

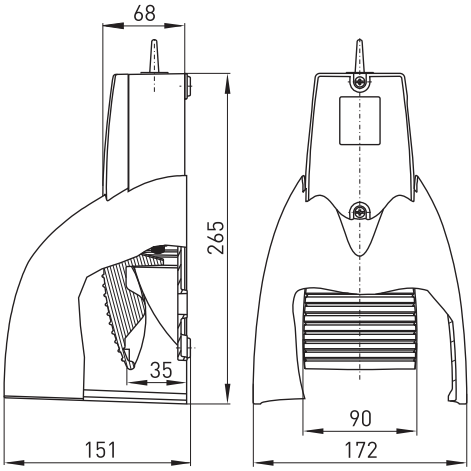

Technical Data

Standards	EN 60947-5-1, EN 61000-6-2, EN 301 489-1, EN 301 489-3, EN 300 220-3; EN 60079-0, EN 60079-11; EN 61241-0, EN 61241-11
Enclosure	aluminium die-cast, enamel finish, RAL 5011
Pedal	aluminium die-cast, enamel finish, RAL 5011
Protective shield	aluminium die-cast, enamel finish, RAL 2004
Degree of protection	IP 67 per EN 60529
Protocol	EnOcean
Ambient temperature Ta	-20 °C ... +60 °C
Switching frequency	approx. 6000 telegrams at repetitions/h
Voltage supply	Electrodynamic energy generator
Frequency	868.3 MHz
Transmission power	max. 10 mW
Data rate	120 kbps
Bandwidth channel	280 kHz
Sensing range	max. 300 m outside, max. 30 m inside
Actuating time	min. 80 ms
Mechanical life	> 1 million operations
Note	no presence signal available
Ex marking	Ⓔx II 2G Ex ib IIC T6, II 2D Ex ibD 21 T80°C
Approvals	BVS 09 ATEX E149, IECEx in 2011

Type code	Ex RF GFSI EN868

868 MHz Funkfrequenz
EnOcean standard
Series
Radio technology
Ex certified component

Features/options
- Installation test tool EPM 300 for radio link range testing
- To measure and indicate the electrical field strength
- Battery not included, requires AA/LR06 cell
- Repeater mode can be selected

// EPM 300

Order number	
EPM 300	90598005

Features/options
- RF magnet antenna with straight SMA plug-in connector without ferrite core
- Cable length 2.5 m
- Order unit: 1 piece

// RF magnet antenna

Order number	
RF magnet antenna	01.08.0386

LIFE TEST OF A FOOT SWITCH PEDAL

Ex safety switches with separate actuators

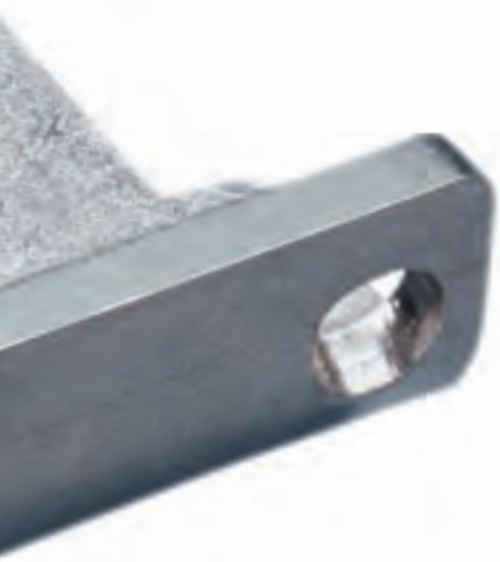

Ex 95 AZ


01-08-00

Ex safety switches with separate actuators

Range of application

These Ex safety switches with a separate actuator are suitable for sliding, hinged and particularly removable safety guards, which need to be closed to ensure the necessary operational safety. They are also suitable for mounting on profile sections and retrofitting on existing equipment.

In combination with a safety relay module series SRM, all safety switches shown in this chapter achieve Control Category 3 or 4 to EN 954-1.

The Ex switches are suitable for application in zone 1 and 2, as well as zone 21 and 22 according to ATEX 94/9/EC.

Design and operating principle

On the Ex safety switches with a separate actuator, the switching element is not physically connected to the actuator, but functionally united or separated by switching. When the guard device is opened, the actuator is separated from the base unit. In this process, NC contacts are positively opened and NO contacts closed. A wide range of coded actuators is available for safety switches series Ex AZ 16, also suitable for small radii. Furthermore, lockout tags and different fixing mechanisms like latching magnets and ball catches can be ordered.

The protection class of all the safety switches is IP 65/67. The safety switches can be fitted in any desired mounting position.

All Ex safety switches shown in this chapter bear the CE mark according to the Machinery Directive 2006/42/EC and according to ATEX 94/9/EC. The Ex safety switches per equipment category 3D bear the CE mark without the number of the notified body and have received a CE declaration of manufacturer conformity.

Application

on sliding guards

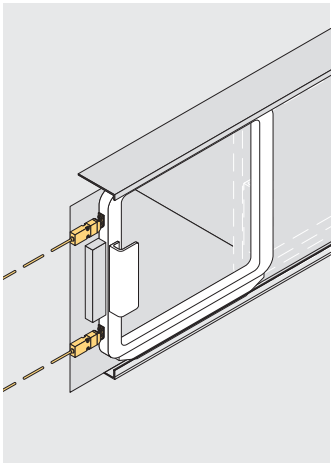

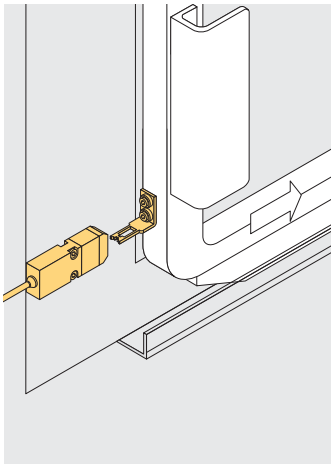

on hinged guards

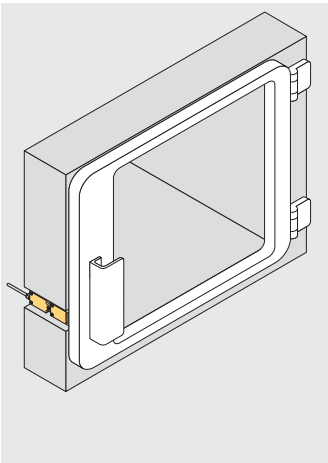

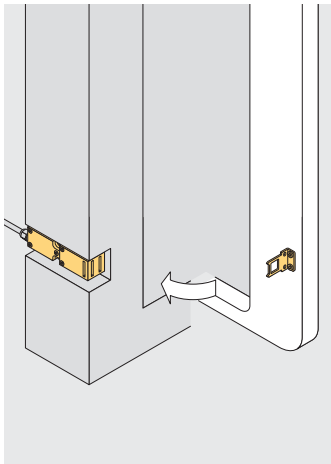

on removable guards

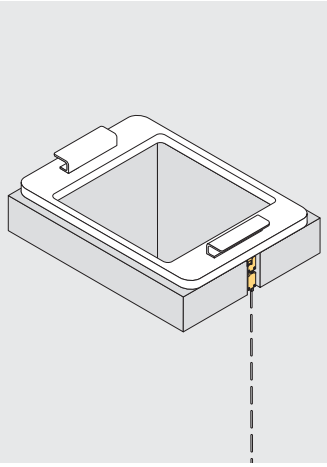

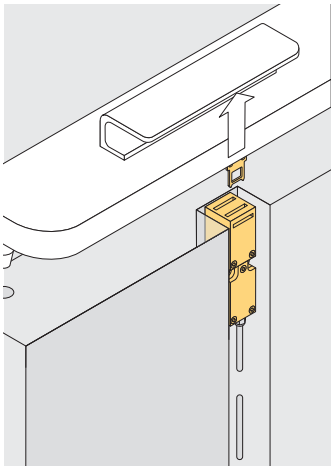

Ex safety switches with separate actuators
// Series Ex ST 14

Features/Options
- Ex zone 1 and 21
- Thermoplastic enclosure
- Double insulated ⧈
- Slow action available with contact overlapping
- Version with cable outlet on side
- With prewired cable, length 1 metre
- Special version only for dust Ex zone 22 available

// EX ST 14

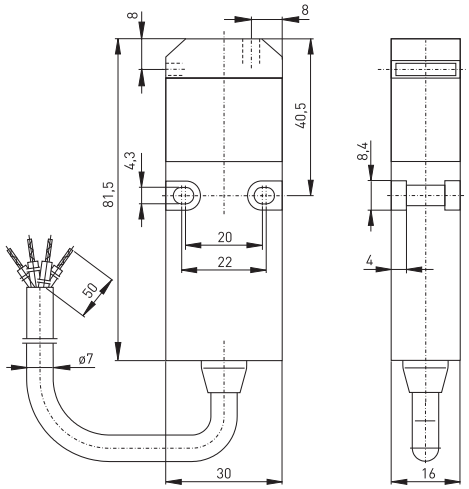

Technical data

Standards	EN 60947-5-1; EN 1088; EN 60079-0, EN 60079-1, EN 60079-31; EN ISO 13849-1
Enclosure	glass-fibre reinforced, shock-proof thermoplastic, self-extinguishing UL 94-V0
Actuator	stainless steel 1.4301
Degree of protection	IP 65 according to EN 60529
Contact material	silver
Switching system	slow action, positive break NC contact ⊖
Switching elements	change-over contact with double break Zb or 2 NC contacts, galvanically separated contact bridges
Connection	cable H05VV-F 4 x 0.75 mm²
Cable length	1, 2, 5 and 10 m
B_{10d} (10 % load)	2 million
T_M	max. 20 years
U_{imp}	4 kV
U_i	250 V
I_{the}	T6: 6 A; T5: 3 A
I_e/U_e	6 A/250 VAC; 4 A/24 VDC; 0.25 A/230 VDC
Utilisation category	AC-15, DC-13
Max. fuse rating	6 A gL/gG D-fuse
Positive break travel	1Ö/1S, 2Ö: 8 mm, UE: 9.5 mm
Ambient temperature Ta	T6: –20 °C ... +65 °C, T5: –20 °C ... +95 °C
Mechanical life	> 1 million operations
Ex marking	Ⓔx II 2G Ex d IIC T6/T5 Gb, II 2D Ex tb IIIC T80°C/T95°C Db IECEx Ex d IIC T6/T5 Gb, Ex tb IIIC T80°C/T95°C Db
Approvals	PTB 03 ATEX 1070 X; IECEx PTB 06.0098X

Contact variants: switch travel/contacts

	Slow action
1 NC/1 NO contact	Ex ST 14 1Ö/1S 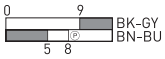
1 NC/1 NO contact with overlapping	Ex ST 14 UE 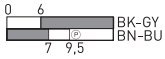
2 NC contacts	Ex ST 14 2Ö 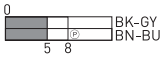

Type code

Ex ST 14 1Ö/1S-S-1m-3D

- Equipment Categ. 3D, dust Ex zone 22
- Cable length 1 m, (2 m, 5 m, 10 m)
- Cable on side
- Contact type 1NC/1NO, (2Ö, UE)
- Series
- Safety door switch
- Ex certified component

Ex safety switches with separate actuators
// Series Ex ST 14, actuators

Features/Options
ST 14-B1
- Rubber mounting damps vibrations on guard devices
- Actuating radius on hinged guards
  a =140 mm and b =1000 mm
- Axial misalignment x = 30 mm

ST 14-B3
- Especially suitable for hinged guards
- Actuating radius on hinged guards
  a = 50 mm
- Axial misalignment x =14 mm

Features/Options
ST 14-B5
- Rubber mounting damps vibrations on guard devices
- Suitable for hinged guards
- Actuating radius on hinged guards
  a =140 mm and b =1000 mm
- Axial misalignment x =15 mm

Note
Inserted position of actuator = 0 in switch travel diagram
The actuators are not included with the switches.

// Straight actuator ST 14-B1

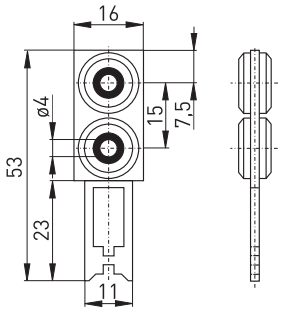

// Flexible actuator ST 14-B3

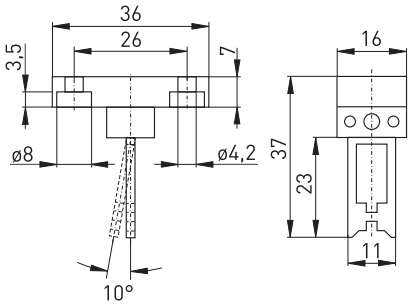

// Angled actuator ST 14-B5

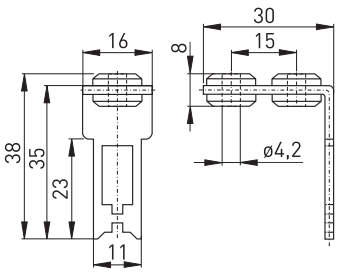

// Actuating radius

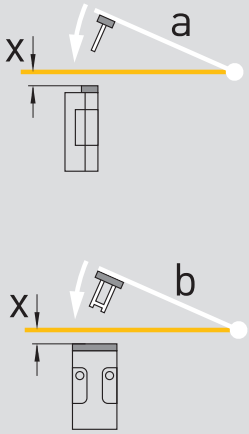

- The axis of the hinge should be x mm above the top edge of the safety switch and in the same plane
- a Actuating radius to the plane of the actuator
- b Actuating radius in line with the plane of the actuator
- x Axial misalignment

Ex safety switches with separate actuators
// Series Ex 95 AZ

Features/Options
- Ex zone 1 and 21
- Thermoplastic enclosure, double insulated
- Slow action, change-over contact with double break
- Wiring compartment
- Mounting details to EN 50 047
- Horizontal mounting slots
- Actuator head can be repositioned in factory in 4 x 90° steps
- Special version only for dust Ex zone 22 available

// EX 95 AZ

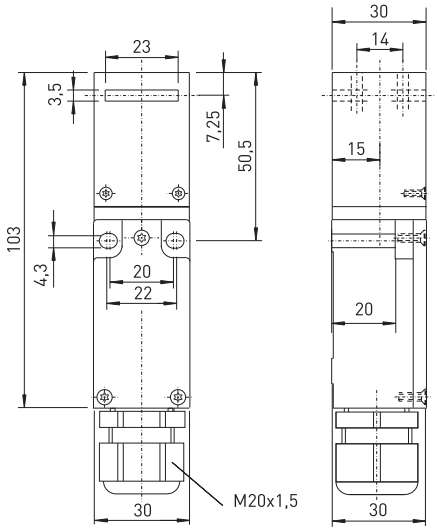

Technical data

Standards	EN 60947-5-1; EN 1088; EN 60079-0, EN 60079-1, EN 60079-7; EN 61241-0, EN 61241-1; EN ISO 13849-1
Enclosure	glass-fibre reinforced, shock-proof thermoplastic, self-extinguishing UL 94-V0
Actuator	stainless steel 1.4301
Degree of protection	IP 67 according to EN 60529
Contact material	silver
Switching system	slow action, positive break NC contact
Switching elements	change-over contact with double break Zb or 2 NC contacts, galvanically separated contact bridges
Connection	M3 screw clamps
Cable section	max. 1.5 mm² (incl. conductor ferrules)
B_{10d} (10 % load)	2 million
T_M	max. 20 years
U_{imp}	4 kV
U_i	250 V
I_{the}	6 A
Ie/Ue	6 A/250 VAC; 0.25 A/230 VDC
Utilisation category	AC-15, DC-13
Max. fuse rating	6 A gL/gG D-fuse
Positive break travel	9 mm
Ambient temperature Ta	–20 °C ... +60 °C
Mechanical life	> 1 million operations
Ex marking	II 2G Ex de IIC T6, II 2D Ex tD A21 IP67 T80°C
Approvals	DMT 01 ATEX E 118, IECEx in 2011

Contact variants: switch travel/contacts

	Slow action
1 NC/1 NO contact	Ex 95 AZ 1Ö/1S 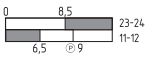
2 NC contacts	Ex 95 AZ 2Ö 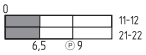

Type code

Ex 95 AZ 1Ö/1S-90°-3D

- Equipment Categ. 3D, dust Ex zone 22
- Actuating head repositioned by 90°
- Contact type 1NC/1NO, (2Ö)
- Separate actuator AZ
- Series
- Ex certified component

Ex safety switches with separate actuators
// Series Ex 95 AZ, actuators

Features/Options
95 AZ-B1
- Actuating radius on hinged guards
  a = 350 mm and b = 700 mm
- Axial misalignment x = 11 mm

95 AZ-B5
- Especially suitable for hinged guards
- Actuating radius on hinged guards
  a = 350 mm and b = 700 mm
- Axial misalignment x = 13.5 mm

Note
Inserted position of actuator = 0 in switch travel diagram
The actuators are not included with the switches.

// Straight actuator 95 AZ-B1

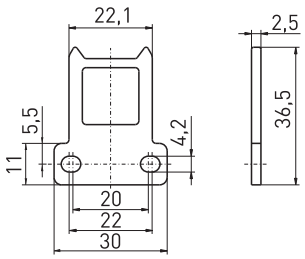

// Angled actuator 95 AZ-B5

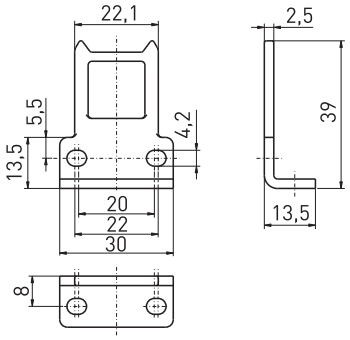

// Actuating radius

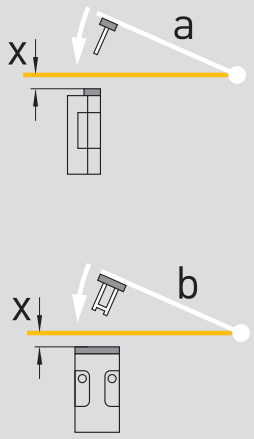

- The axis of the hinge should be x mm above the top edge of the safety switch and in the same plane
- a Actuating radius to the plane of the actuator
- b Actuating radius in line with the plane of the actuator
- x Axial misalignment

Features/Options
- Ex zone 1 and 21
- Thermoplastic enclosure
- Multiple coding
- Slow action ⊖, change-over contact with double break
- With prewired cable, length 2 or 5 metres
- Special version only for dust Ex zone 22 available

// EX AZ 16

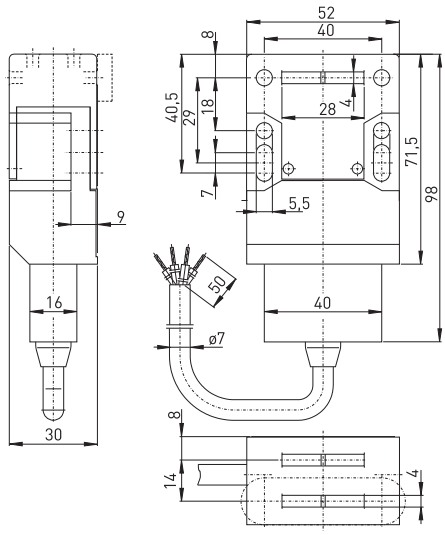

Technical data

Standards	EN 60947-5-1; EN 1088; EN 60079-0, EN 60079-1, EN 60079-31; EN ISO 13849-1
Enclosure	glass-fibre reinforced, shock-proof thermoplastic, self-extinguishing UL 94-V0
Actuator	stainless steel 1.4301
Switch insert	Ex 13
Degree of protection	IP 65 according to EN 60529
Contact material	silver
Switching system	slow action, positive break NC contact ⊖
Switching elements	change-over contact with double break Zb, galvanically separated contact bridges
Connection	cable H05VV-F, 4 x 0.75 mm²
Cable length	2 and 5 m
B_{10d} (10 % load)	2 million
T_M	max. 20 years
U_{imp}	4 kV
U_i	250 V
I_{the}	T6: 6 A, T5: 3 A
I_e/U_e	6 A/250 VAC; 0.25 A/230 VDC
Utilisation category	AC-15, DC-13
Max. fuse rating	6 A gL/gG D-fuse
Positive break travel	9.5 mm
Positive break force	ca. 15 N
Ambient temperature Ta	T6: –20 °C ... +65 °C, T5: –20 °C ... +95 °C
Mechanical life	> 1 million operations
Ex marking	Ⓔx II 2G Ex d IIC T6/T5 Gb, II 2D Ex tb IIIC T80°C/T95°C Db IECEx Ex d IIC T6/T5 Gb, Ex tb IIIC T80°C/T95°C Db
Approvals	PTB 03 ATEX 1068 X, IECEx PTB 06.0053 X referring to the switch insert

Contact variants: switch travel/contacts

	Slow action
1 NC/1 NO contact	Ex AZ 16 1Ö/1S 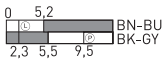

Type code

Ex AZ 16 1Ö/1S-30N-2m-3D

- Equipment Categ. 3D, dust Ex zone 22
- Cable length 2 m, (5 m)
- 30 N latching force (5N, blank ejection force)
- 1 NC/1 NO contact
- Degree of protection IP 67
- Series
- Separate actuator AZ
- Ex certified component

Features/Options
AZ 15/16-B1
- Actuating radius on hinged guards
  a = 150 mm and b = 150 mm
- Axial misalignment x = 5 mm
AZ 15/16-B2
- Actuating radius on hinged guards
  b = 45 mm
- Axial misalignment = 11 mm
AZ 15/16-B3
- Actuating radius on hinged guards
  a = 32 mm

Features/Options
- Axial misalignment x = 11 mm
AZ 15/16-B6
- Actuating radius on hinged guards
  a = 25 mm and b = 38 mm
- Axial misalignment x = 11 mm

Note
Inserted position of actuator = 0 in switch travel diagram
The actuators are not included with the switches.

// Straight actuator AZ 15/16-B1

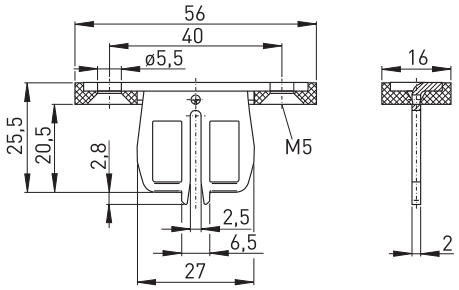

// Flexible actuator AZ 15/16-B2

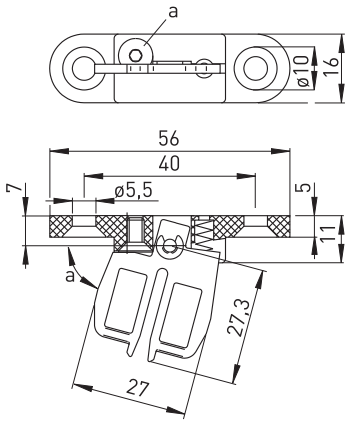

// Flexible actuator AZ 15/16-B3

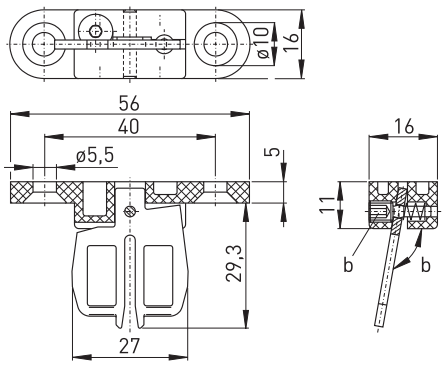

// Actuating radius

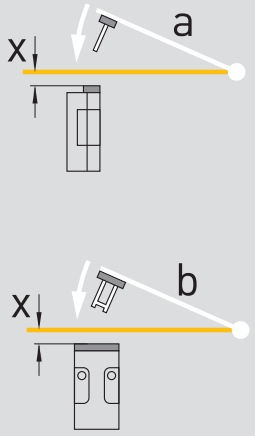

// Flexible actuator AZ 15/16-B6

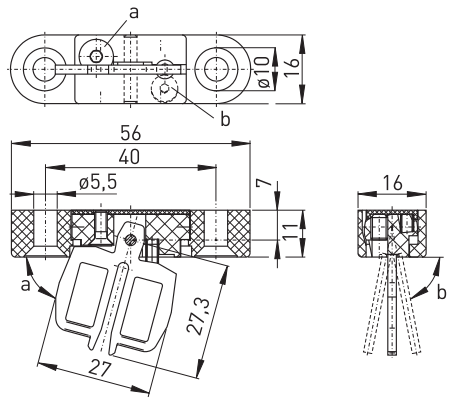

- The axis of the hinge should be x mm above the top edge of the safety switch and in the same plane
- a Actuating radius to the plane of the actuator
- b Actuating radius in line with the plane of the actuator
- x Axial misalignment

Ex safety switches with separate actuators
// Series Ex AZ 16, actuators

Features/Options
AZ 15/16-B1-2245
- Actuating radius on hinged guards
  a = 150 mm and b = 150 mm
- Axial misalignment x = 14 mm
- Rubber mounting damps vibrations on guard devices
- Max. 200 Ncm tightening torque for fixing the actuator

Actuator with magnetic latch
- For play-free interlocking of light guards, holding force: 30 N
- The magnetic latch can easily be fitted in any actuating plane
- Suitable for retrofitting

Features/Options
AZ 15/16-B1-1747
- Actuating radius on hinged guards
  a = 150 mm and b = 150 mm, axial misalignment x = 5 mm
AZ 15/16-B2-1747
- Actuating radius on hinged guards
  b = 45 mm, axial misalignment x = 11 mm
AZ 15/16-B3-1747
- Actuating radius on hinged guards
  a = 32 mm, axial misalignment x = 11 mm

// Actuator with rubber AZ 15/16-B1-2245

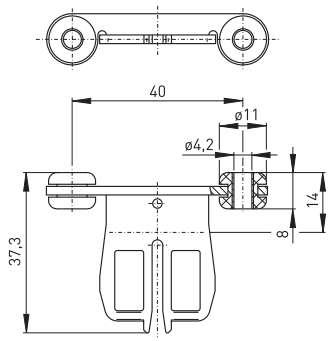

// Actuator with magnetic latch

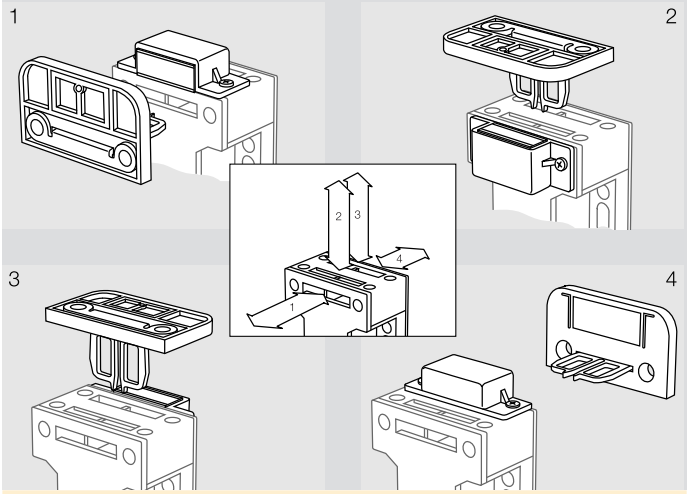

// Magnetic latch

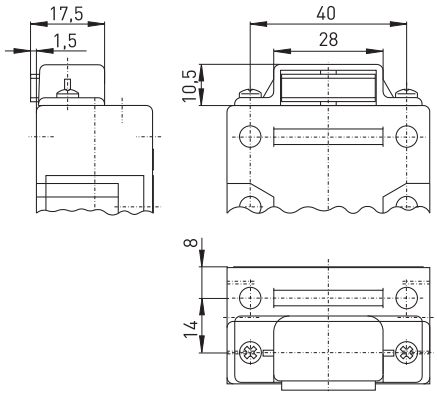

// Actuator magn. latch AZ 15/16-B1-1747

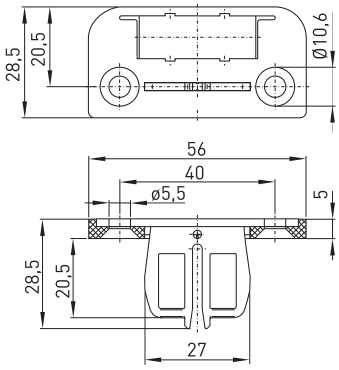

// Actuator magn. latch AZ 15/16-B2-1747

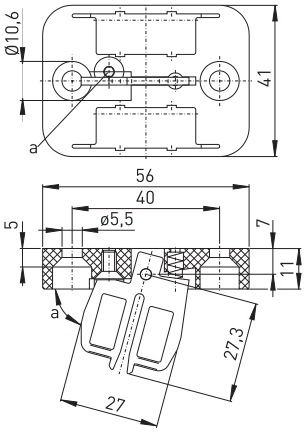

// Actuator magn. latch AZ 15/16-B3-1747

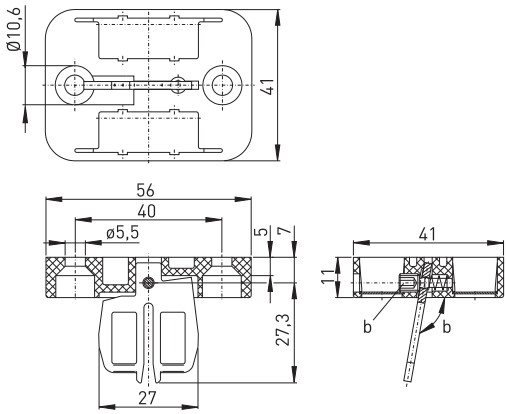

Features/Options
Actuator with ball latch
- For interlocking of light to medium-weight guards
- Latching force adjustable up to 100 N
AZ 15/16-B1-2053
- Actuating radius on hinged guards
  a = 150 mm and b = 150 mm
- Axial misalignment x = 11 mm

Features/Options
Actuator with centering guide
- For interlocking of light, unguided guards
AZ 15/16-B1-2177
- Actuating radius on hinged guards
  a = 150 mm and b = 150 mm
- Axial misalignment x = 11 mm

// Actuator with ball latch

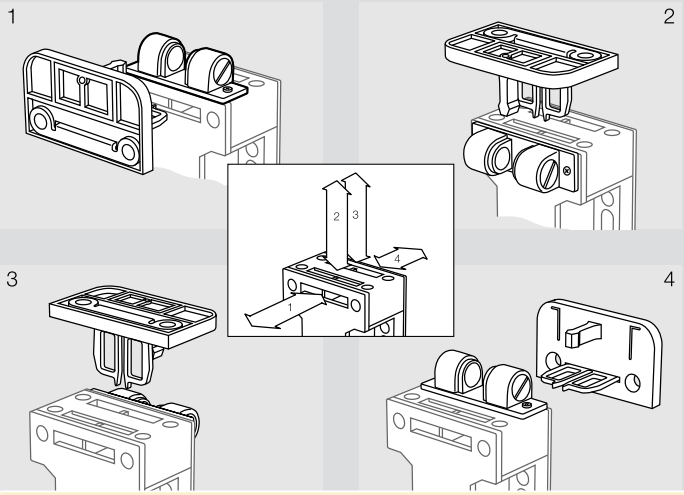

// Ball latch

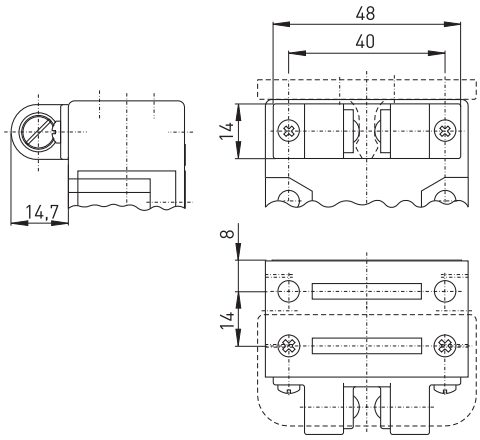

// Actuator ball latch AZ 15/16-B1-2053

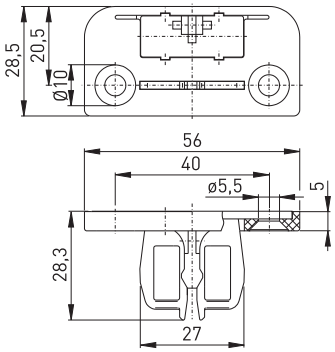

// Actuator with centering guide

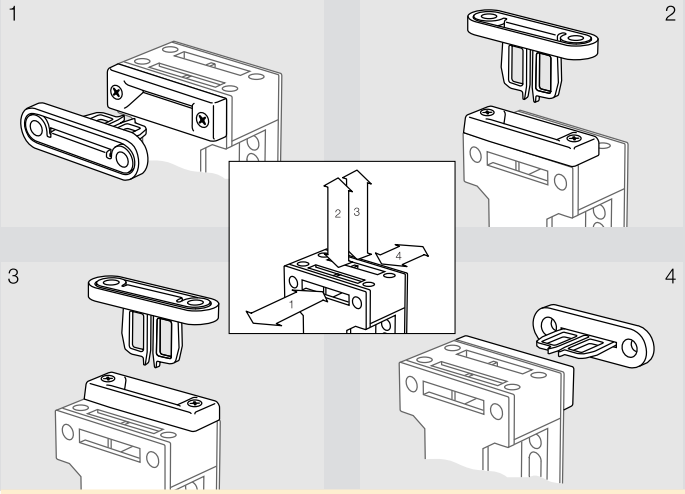

// Centering guide

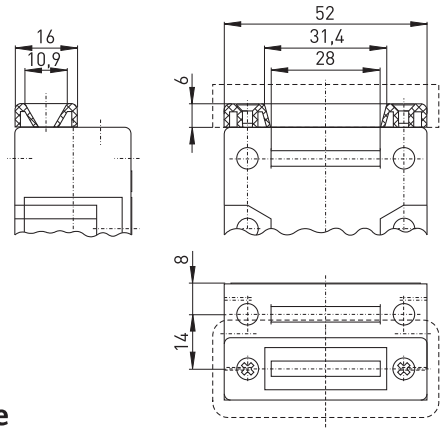

// Actuator cent. guide AZ 15/16-B1-2177

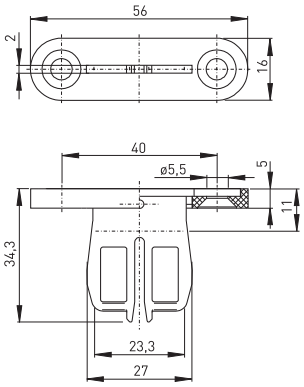

Features/Options
Actuator with slot lip-seal AZ 15/16-B1-2024
- For protection against the ingress of coarse dirt
- Particularly suitable for sliding doors
- Actuating radius on hinged guards
  a = 150 mm and b = 150 mm, axial misalignment x = 11 mm
Slot sealing plug AZ 15/16-1476
- For protection against the ingress of coarse dirt
- To cover unused actuator slots
- Simple clip-in fitting
- Quantity required: 3 per switch, ordering unit: 10 pieces

Features/Options
Ball latch 2053-2
- Additional ball latch for stable latching
  of light to medium-weight guards
- For separate mounting on the guard
- Latching force adjustable up to 100 N
Lockout tag SZ 16/335
- To prevent inadvertent closing, e. g. during maintenance
  by preventing actuation of the switch
- For complex plants
- Up to 6 padlocks can be fitted
- The lockout tag can be fixed on a chain near to the safety switch

// Actuator with slot lip-seal

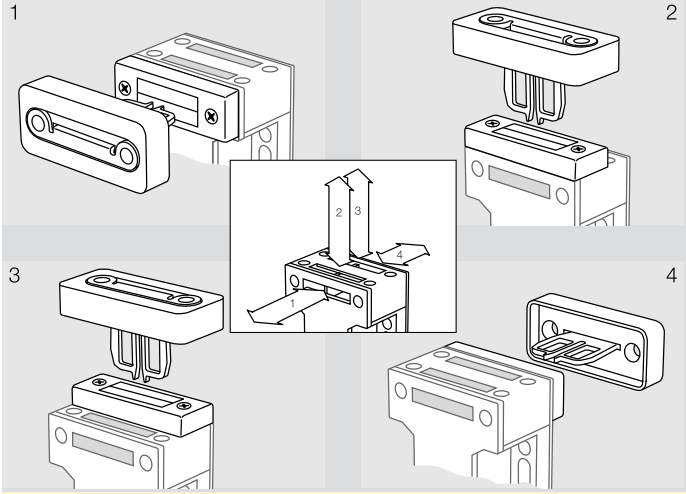

// Slot lip-seal

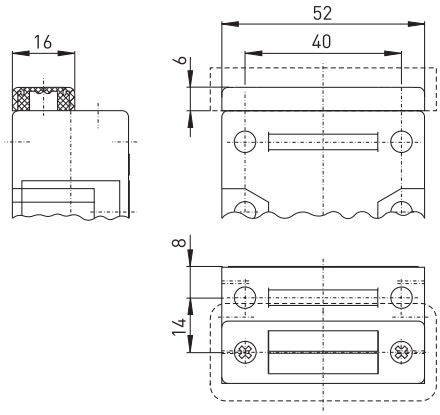

// Actuator slot lip-seal AZ 15/16-B1-2024

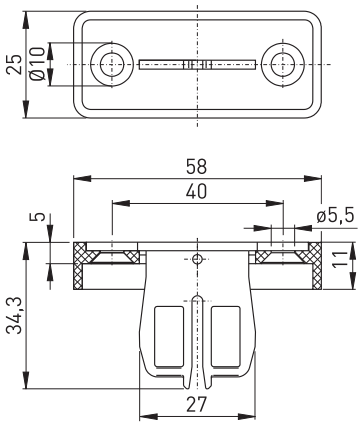

// Slot sealing plug AZ 15/16-1476

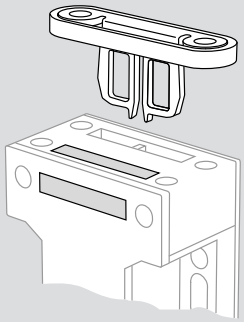

// Ball latch 2053-2

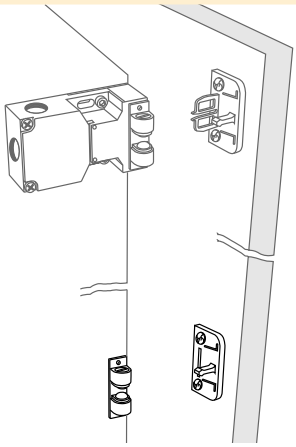

// Lockout tag SZ 16/335

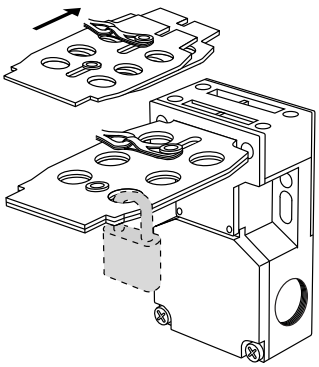

Features/Options
Tamperproof screws
- To mount the actuator
- Higher protection against tampering with interlock
- Protects against unauthorised removal of actuator
- Available in various lengths
- Countersunk-head screws
  M 5 x 12, M 5 x 16 and M 5 x 20 available
- Ordering unit: 2 pieces

Features/Options
- Suitable for actuators B1, B2, B3 and B6
- Equipped with square nuts for front mounting of switch
- Ordering suffix: -1762

// Tamperproof screws

// Front mounting AZ 16-1762

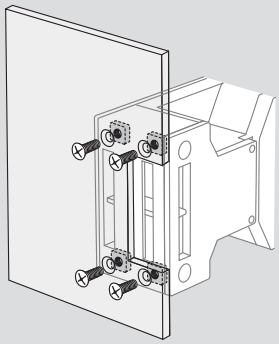

Ex safety switches with separate actuators
// Series Ex 335 AZ, actuators

Features/Options
AZ 335/355-B1
- Actuating radius on hinged guards
  a = 900 mm and b = 700 mm
- Axial misalignment x = 52.7 mm

AZ 335/355-B1-2245
- Rubber mounting damps vibrations on guard devices
- Actuating radius on hinged guards
  a = 900 mm and b = 700 mm
- Axial misalignment x = 52.7 mm

Features/Options
AZ 335/355-B5
- Especially suitable for hinged guards
- Actuating radius on hinged guards
a = 900 mm and b = 700 mm
- Axial misalignment x = 15.4 mm

Note
Inserted position of actuator = 0 in switch travel diagram
The actuators are not included with the switches.

// Straight actuator AZ 335/355-B1

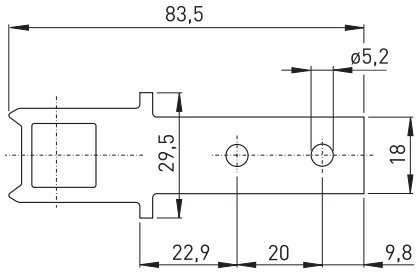

// Straight actuator AZ 335/355-B1-2245

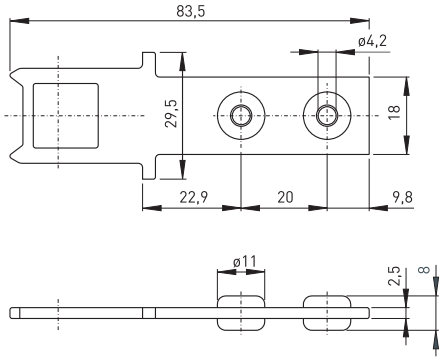

// Angled actuator AZ 335/355-B5

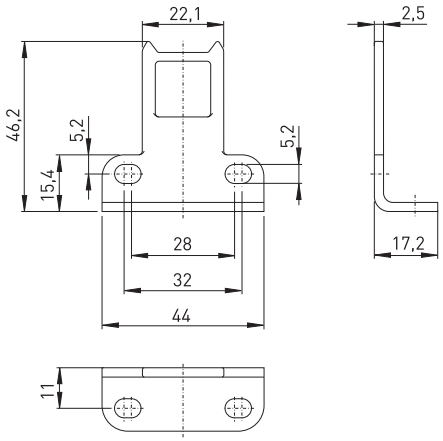

// Actuating radius

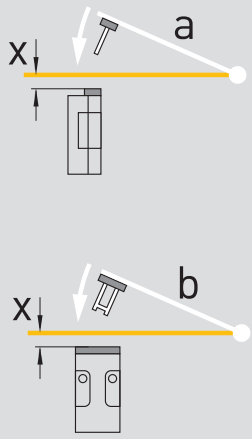

- The axis of the hinge should be x mm above the top edge of the safety switch and in the same plane
- a Actuating radius to the plane of the actuator
- b Actuating radius in line with the plane of the actuator
- x Axial misalignment

Ex safety switches with separate actuators
// Series Ex 335 AZ

Features/Options
- Ex zone 1 and 21
- Metal enclosure
- Mounting details to EN 50 041
- Wiring compartment
- Actuator head can be repositioned in factory in 4 x 90° steps
- Special version only for dust Ex zone 22 available

// EX 335 AZ

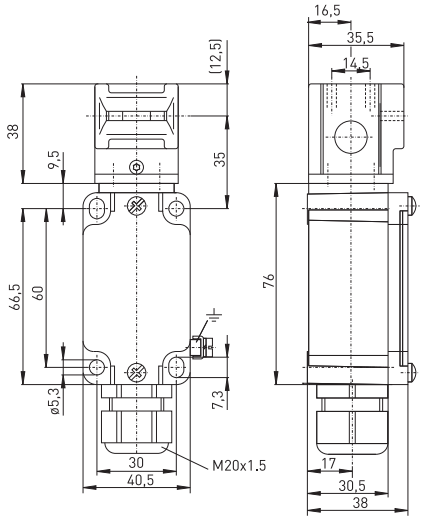

Technical data

Standards	EN 60947-5-1; EN 1088; EN 60079-0, EN 60079-1, EN 60079-7, EN 60079-31; IEC 61241-0, -1; EN ISO 13849-1
Enclosure	zinc die casting, enamelled
Actuator	stainless steel 1.4301
Switch insert	Ex 95
Degree of protection	IP 67 according to EN 60529
Contact material	silver
Switching system	slow action, positive break NC contact ⊖
Switching elements	change-over contact with double break Zb or 2 NC contacts, galvanically separated contact bridges
Connection	M3 screw clamps
Cable section	max. 1.5 mm² (incl. conductor ferrules)
B_{10d} (10 % load)	2 million
T_M	max. 20 years
U_{imp}	4 kV
U_i	250 V
I_{the}	6 A
I_e/U_e	6 A/250 VAC; 0.25 A/230 VDC
Utilisation category	AC-15, DC-13
Max. fuse rating	6 A gL/gG D-fuse
Positive break travel	8.3 mm
Ambient temperature Ta	–20 °C ... +60 °C
Mechanical life	> 1 million operations
Ex marking	Ⓔx II 2G Ex de IIC T6/T5 Gb, II 2D Ex tb IIIC T80°C/T95°C Db IECEx Ex de IIC T6/T5 Gb, Ex tb IIIC T80°C/T95°C Db
Approvals	DMT 01 ATEX E 178, IECEx BVS 07.0014

Contact variants: switch travel/contacts

	Slow action
1 NC/1 NO contact	Ex 335 AZ 1Ö/1S 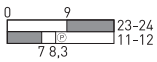
2 NC contacts	Ex 335 AZ 2Ö 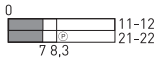

Type code

Ex 335 AZ 1Ö/1S-3D

- Equipment Categ. 3D, dust Ex zone 22
- Contact type 1Ö/1S, (2Ö)
- Separate actuator AZ
- Series
- Ex certified component

Ex safety switches with separate actuators
// Series Ex 335 AZ, actuators

Features/Options
AZ 335/355-B5-Flex
- Especially suitable for sliding and hinged guards
- Compensates play of ± 5 mm in two axes
- Actuating radius on hinged guards
  a = 100 mm and b = 100 mm, axial misalignment x = 30.3 mm

AZ 335/355-B6
- Especially suitable for hinged guards
- Actuating radius adjustable, min. 100 mm, using a hexagonal key wrench 2 mm A/F (a or b)
- Actuating radius on hinged guards
  a = 100 mm and b = 100 mm, axial misalignment x = 13 mm

Features/Options
AZ 335/355-B6-Flex
- Especially suitable for hinged guards
- Compensates play of ± 5 mm in two axes
- Actuating radius on hinged guards
  a = 100 mm, axial misalignment x = 28 mm

Lockout tag SZ 16/335
- To prevent inadvertent closing, e. g. during maintenance by preventing actuation of the switch

Slot sealing plug AZ 335/355-1990
- For protection against the ingress of coarse dirt
- Quantity required: 3 per switch, ordering unit: 10 pieces

// Angled actuator AZ 335/355-B5-Flex

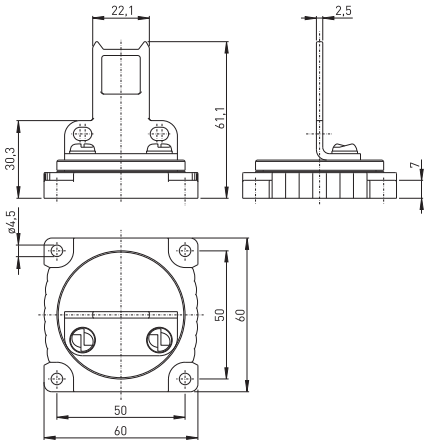

// Flexible actuator AZ 335/355-B6

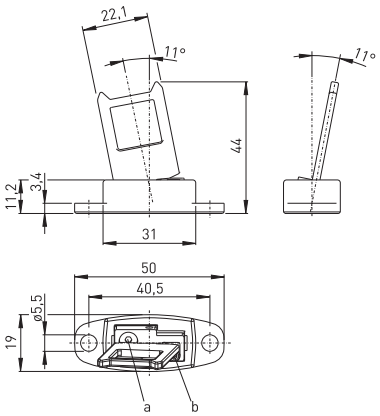

// Flexible actuator AZ 335/355-B6-Flex

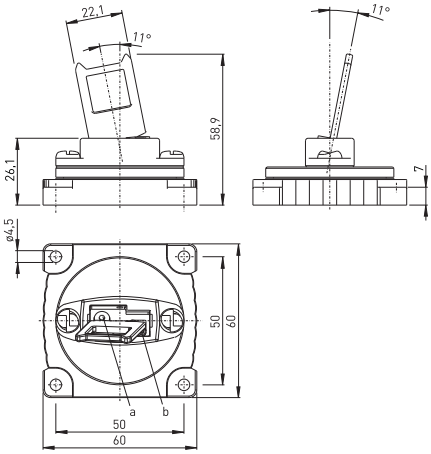

// Lockout tag SZ 16/335

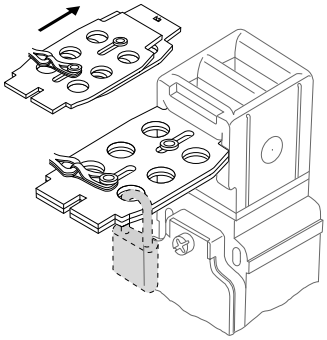

// Slot sealing plug AZ 335/355-1990

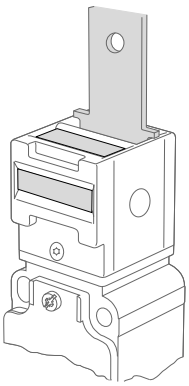

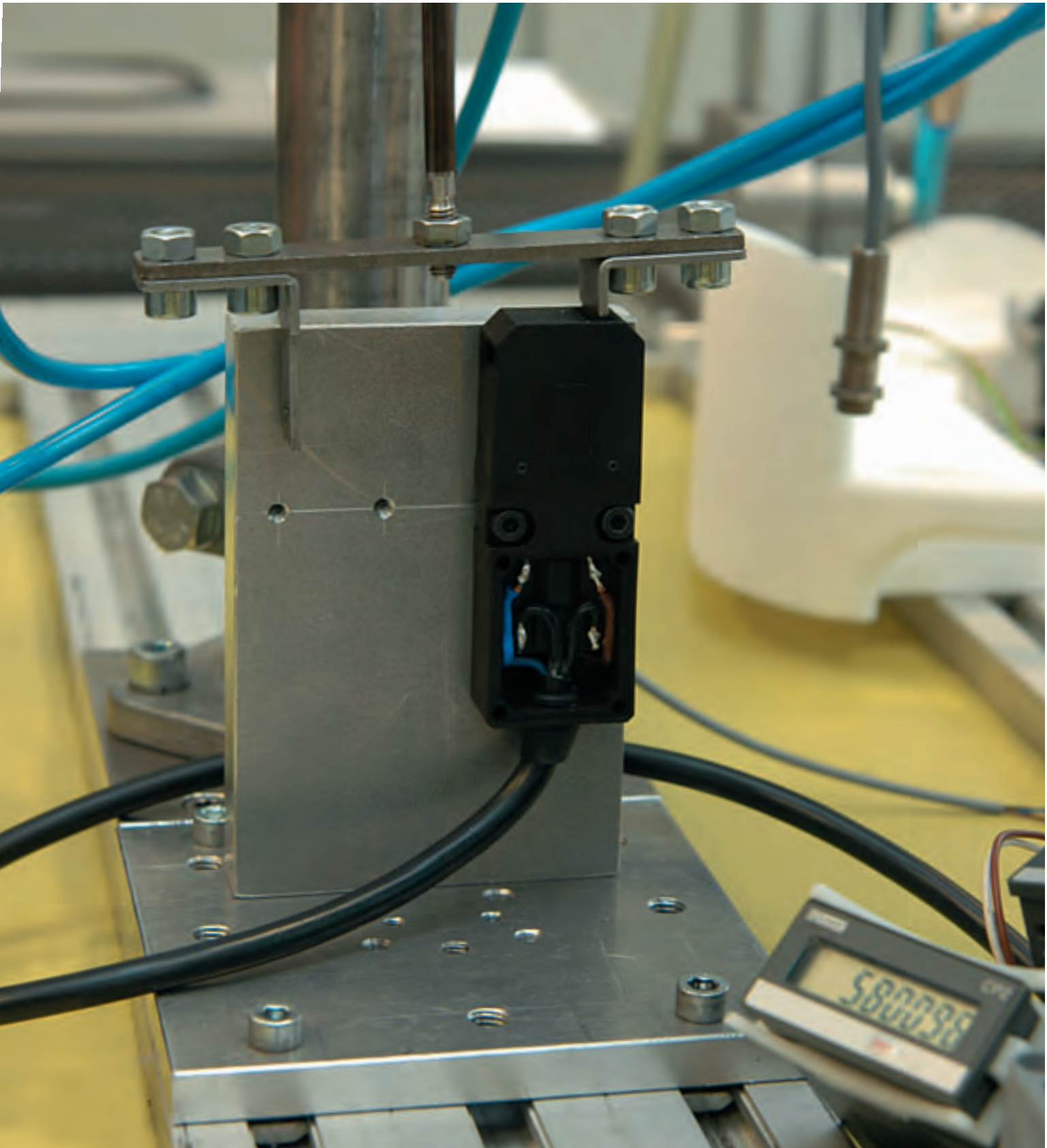

Ex safety switches with separate actuators
// Series Ex 355 AZ

Features/Options
- Ex zone 1 and 21
- Metal enclosure
- Mounting details to EN 50 041
- Wiring compartment
- Actuator head can be repositioned in factory in 4 x 90° steps
- Special version only for dust Ex zone 22 available

// EX 355 AZ

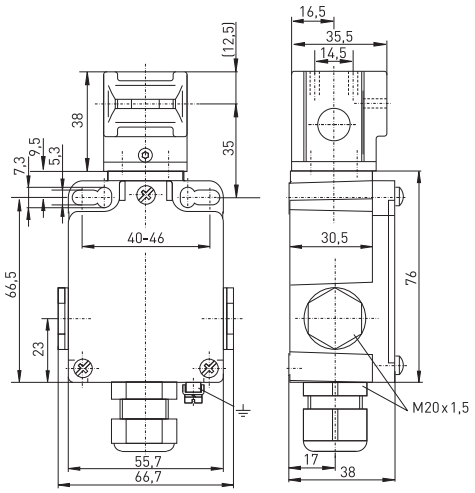

Technical data

Standards	EN 60947-5-1; EN 1088; EN 60079-0, EN 60079-1, EN 60079-7, EN 60079-31; EN ISO 13849-1
Enclosure	zinc die casting, enamelled
Actuator	stainless steel 1.4301
Switch insert	Ex 95
Degree of protection	IP 67 according to EN 60529
Contact material	silver
Switching system	slow action, positive break NC contact ⊖
Switching elements	change-over contact with double break Zb or 2 NC contacts, galvanically separated contact bridges
Connection	M3 screw clamps
Cable section	max. 1.5 mm² (incl. conductor ferrules)
B_{10d} (10 % load)	2 million
T_M	max. 20 years
U_{imp}	4 kV
U_i	250 V
I_{the}	6 A
I_e/U_e	6 A/250 VAC; 0.25 A/230 VDC
Utilisation category	AC-15, DC-13
Max. fuse rating	6 A gL/gG D-fuse
Positive break travel	8.3 mm
Ambient temperature Ta	–20 °C ... +60 °C
Mechanical life	> 1 million operations
Ex marking	Ⓔx II 2G Ex de IIC T6/T5 Gb, II 2D Ex tb IIIC T80°C/T95°C Db IECEx Ex de IIC T6/T5 Gb, Ex tb IIIC T80°C/T95°C Db
Approvals	BVS 04 ATEX E 126, IECEx BVS 07.0013

Contact variants: switch travel/contacts

	Slow action
1 NC/1 NO contact	Ex 355 AZ 1Ö/1S 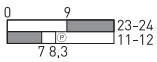
2 NC contacts	Ex 355 AZ 2Ö 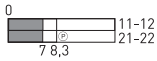

Type code

Ex 355 AZ 1Ö/1S-3D

- Equipment Categ. 3D, dust Ex zone 22
- Contact type 1Ö/1S, (2Ö)
- Separate actuator AZ
- Series
- Ex certified component

Ex safety switches with separate actuators
// Series Ex 355 AZ, actuators

Features/Options
AZ 335/355-B1
- Actuating radius on hinged guards
  a = 900 mm and b = 700 mm
- Axial misalignment x = 52.7 mm

AZ 335/355-B1-2245
- Rubber mounting damps vibrations on guard devices
- Actuating radius on hinged guards
  a = 900 mm and b = 700 mm
- Axial misalignment x = 52.7 mm

Features/Options
AZ 335/355-B5
- Especially suitable for hinged guards
- Actuating radius on hinged guards
  a = 900 mm and b = 700 mm
- Axial misalignment x = 15.4 mm

Note
Inserted position of actuator = 0 in switch travel diagram
The actuators are not included with the switches.

// Straight actuator AZ 335/355-B1

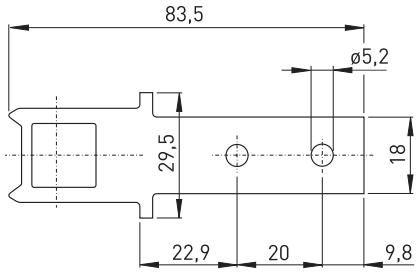

// Straight actuator AZ 335/355-B1-2245

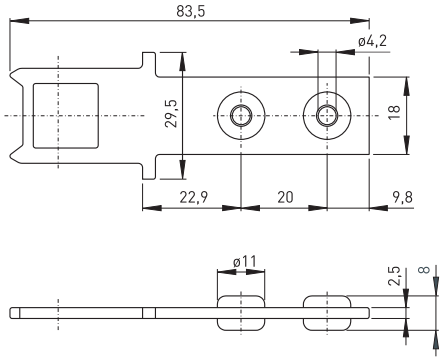

// Angled actuator AZ 335/355-B5

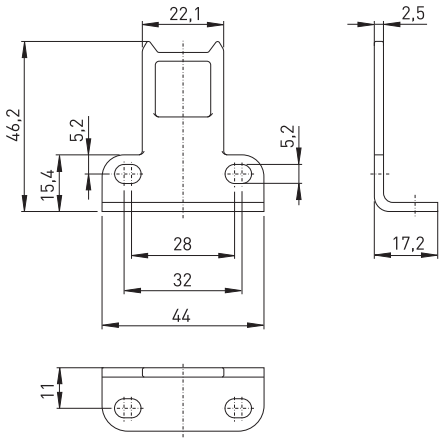

// Actuating radius

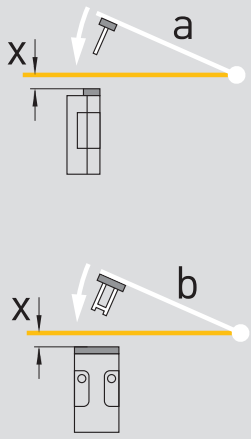

- The axis of the hinge should be x mm above the top edge of the safety switch and in the same plane
- a Actuating radius to the plane of the actuator
- b Actuating radius in line with the plane of the actuator
- x Axial misalignment

Ex safety switches with separate actuators
// Series Ex 355 AZ, actuators

Features/Options
AZ 335/355-B5-Flex
- Especially suitable for sliding and hinged guards
- Compensates play of ± 5 mm in two axes
- Actuating radius on hinged guards
  a = 100 mm and b = 100 mm, axial misalignment x = 30.3 mm

AZ 335/355-B6
- Especially suitable for hinged guards
- Actuating radius adjustable, min. 100 mm, using a hexagonal key wrench 2 mm A/F (a or b)
- Actuating radius on hinged guards
  a = 100 mm and b = 100 mm, axial misalignment x = 13 mm

Features/Options
AZ 335/355-B6-Flex
- Especially suitable for hinged guards
- Compensates play of ± 5 mm in two axes
- Actuating radius on hinged guards
  a = 100 mm, axial misalignment x = 28 mm

Lockout tag SZ 16/335
- To prevent inadvertent closing, e. g. during maintenance by preventing actuation of the switch

Slot sealing plug AZ 335/355-1990
- For protection against the ingress of coarse dirt
- Quantity required: 3 per switch, ordering unit: 10 pieces

// Angled actuator AZ 335/355-B5-Flex

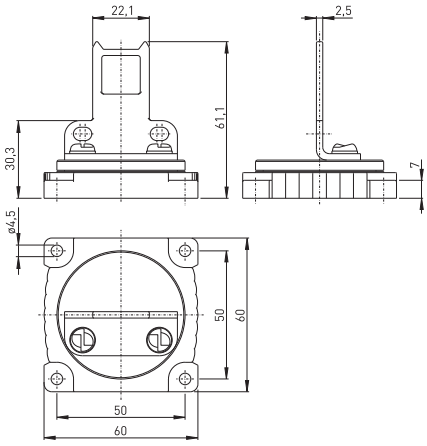

// Flexible actuator AZ 335/355-B6

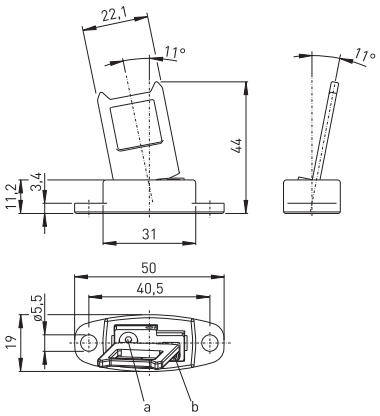

// Flexible actuator AZ 335/355-B6-Flex

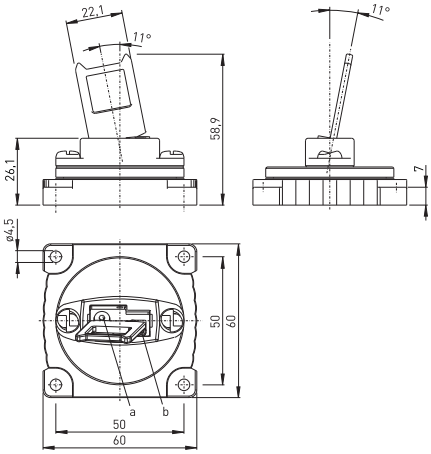

// Lockout tag SZ 16/335

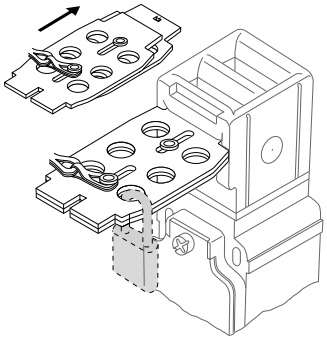

// Slot sealing plug AZ 335/355-1990

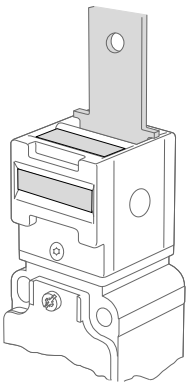

EX SWITCH INSERT AFTER MOULDING

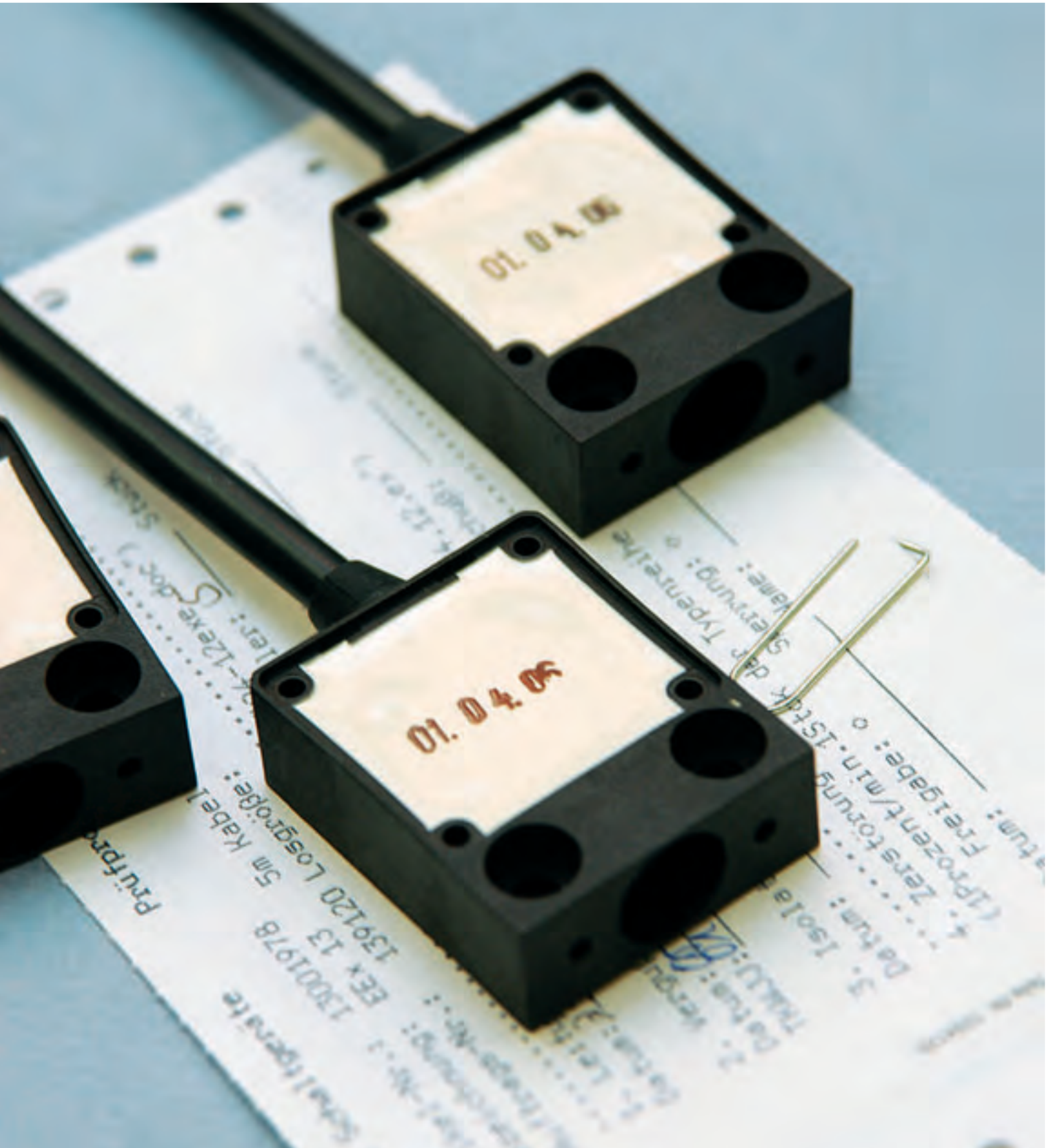

Ex safety switches with separate actuators
// Series Ex ST 61

Features/Options
- Ex zone 1 and 21
- Metal enclosure
- Double insulated ⧈
- Slow action ⊖, change-over contact with double break
- Pre-wired cable, cable length 3 metres
- Long life
- High level of contact reliability with low voltages and currents
- Special version only for dust Ex zone 22 available

// EX ST 61

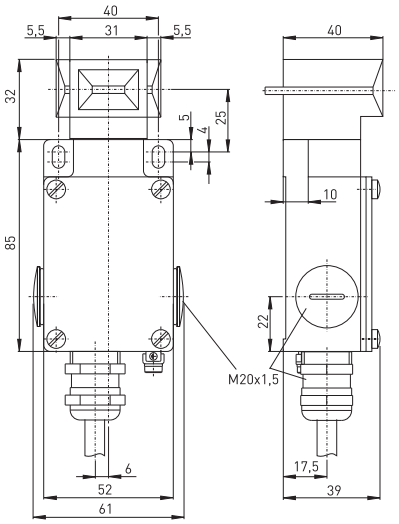

Technical data

Standards	EN 60947-5-1; EN 1088; EN 60079-0, EN 60079-1, EN 60079-31; EN ISO 13849-1
Enclosure	aluminium die casting, enamelled
Actuator	stainless steel 1.4301
Switch insert	Ex 14
Degree of protection	IP 65 according to EN 60529
Contact material	silver
Switching system	slow action, NC contact with positive break ⊖
Switching elements	change-over contact with double break Zb, galvanically separated contact bridges
Connection	cable H05VV-F, 4 x 0.75 mm^2
Cable length	3 m
B_{10d} (10 % load)	2 million
T_M	max. 20 years
U_{imp}	4 kV
U_i	250 V
I_{the}	T6: 6 A; T5: 3 A
I_e/U_e	6 A/250 VAC; 0.25 A/230 VDC
Utilisation category	AC-15, DC-13
Max. fuse rating	6 A gL/gG D-fuse
Positive break travel	12 mm
Ambient temperature Ta	T6: –20 °C ... +65 °C, T5: –20 °C ... +95 °C
Mechanical life	> 1 million operations
Ex marking	Ⓔx II 2G Ex d IIC T6/T5 Gb, II 2D Ex tb IIIC T80°C/T95°C Db IECEx Ex d IIC T6/T5 Gb, Ex tb IIIC T80°C/T95°C Db
Approvals	PTB 03 ATEX 1070 X*, IECEx PTB 06.0098X*

*referring to the switch insert

Contact variants: switch travel/contacts

	Slow action
1 NC/1 NO contact	Ex ST 61 1Ö/1S

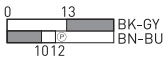

Type code	Ex ST 61 1Ö/1S

Contact type 1Ö/1S
Series
Safety door switch
Ex certified component

Ex safety switches with separate actuators
// Series Ex ST 61, actuators

Features/Options
ST 61-B1
- Rubber mounting damps vibrations on guard devices
- Actuating radius on hinged guards
  a = 140 mm and b = 1000 mm
- x = 30 mm

Features/Options
ST 61-B5
- Rubber mounting damps vibrations on guard devices
- Especially suitable for hinged guards
- Actuating radius on hinged guards
  a = 140 mm and b = 1000 mm
- x = 15 mm

Note
Inserted position of actuator = 0 in switch travel diagram
The actuators are not included with the switches.

// Straight actuator ST 61-B1

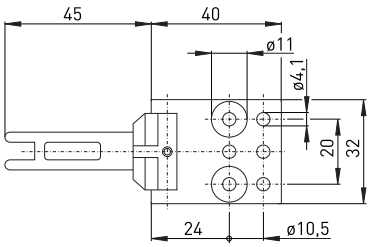

// Angled actuator ST 61-B5

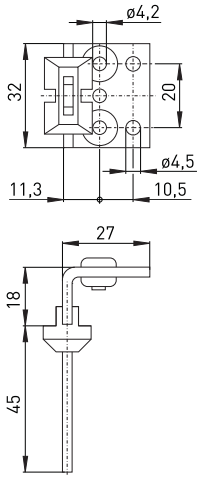

// Actuating radius

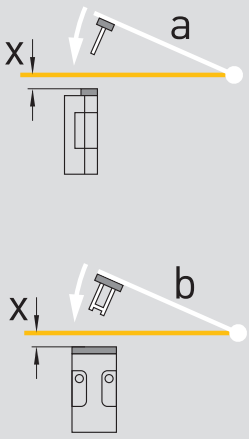

- The axis of the hinge should be x mm above the top edge of the safety switch and in the same plane
- a Actuating radius to the plane of the actuator
- b Actuating radius in line with the plane of the actuator
- x Axial misalignment

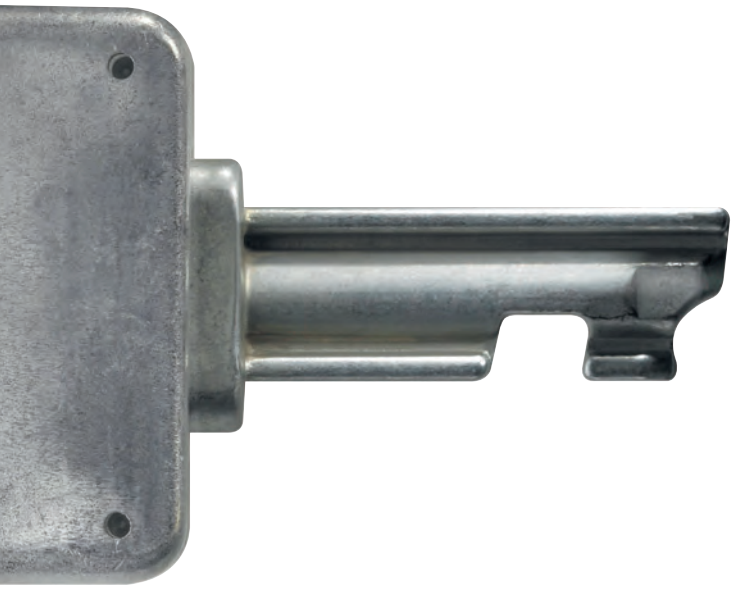

Ex solenoid interlocks

Ex AZM 415

Ex solenoid interlocks

Range of application

The Ex solenoid and pneumatic interlocks ensure that sliding, hinged and removable guarding devices, such as grids, hoods or doors, cannot be opened until dangerous conditions (e.g. run-on movements) have been terminated. This takes place in co-ordination with the control system of a machine. Fail-safe standstill monitors or delay timers monitor run-on movements or time sequences. These Ex solenoid and pneumatic interlocks are also used for cases in which the opening of a guarding device represents a non-permissible intrusion in a production process.

In combination with the SRM range safety relay module, the AZM and AZP range Ex solenoid and pneumatic interlocks achieve Control Category 3 or 4 to EN 954-1, subject to suitable circuit arrangements.

Design and operating principle

On the Ex solenoid and pneumatic interlocks, the switching element with interlock is not physically connected to the actuator but functionally united or separated on switching. When the guard device is opened in the uninterlocked condition, the actuator is separated from the base unit. In the process, NC contacts are positively opened and NO contacts closed. The machine control circuit is only activated when the actuator has been inserted into the interlock and is interlocked. The Ex solenoid and pneumatic interlocks operate on the principle of »actuated without power supply«, whereby the actuator is held in the interlock by spring pressure. When power/air is supplied to the solenoid/pneumatic cylinder, the interlock is released. The guarding device can then be opened. The Ex solenoid interlocks with the power-to-lock principle work in the opposite way.

The Ex solenoid interlocks shown in this chapter bear the CE mark according to the Machinery Directive 2006/42/EC and according to ATEX 94/9/EC. The Ex solenoid interlocks per equipment category 3D bear the CE mark without the number of the notified body and have received a CE declaration of manufacturer conformity.

Application

on sliding guards

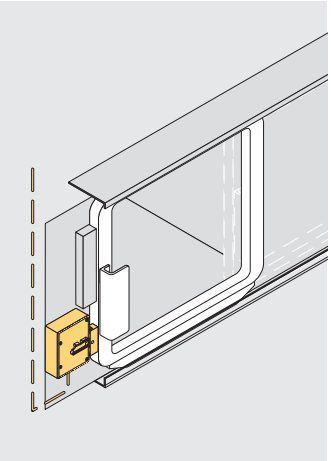

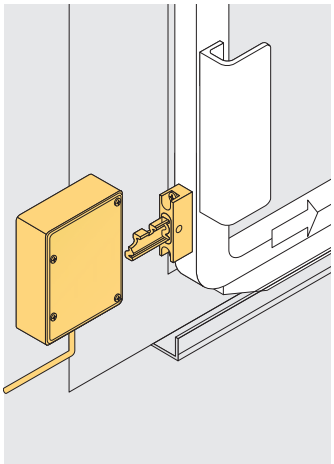

on hinged guards

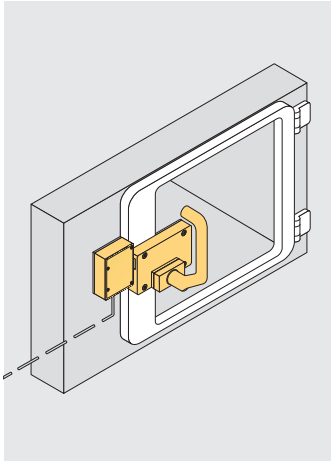

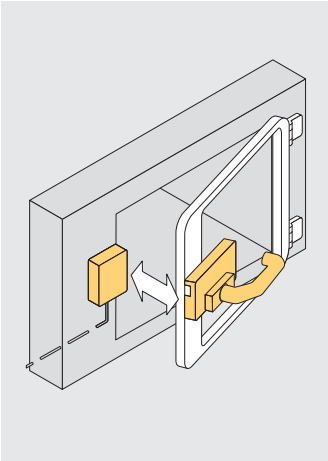

on removable guards

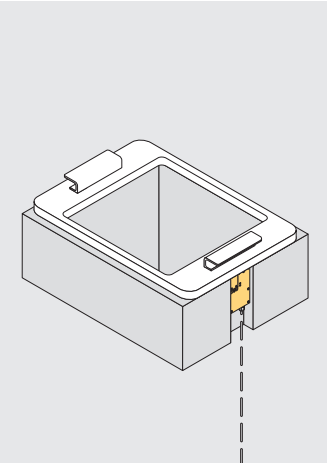

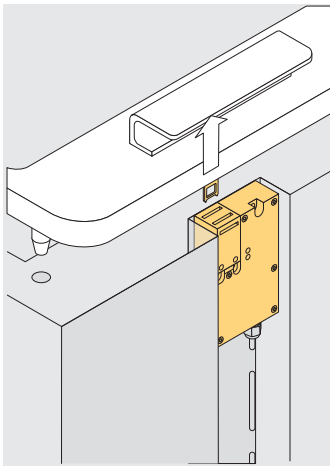

Features/Options
- Ex zone 1 and 21
- Thermoplastic enclosure
- Double insulated ⧈
- Two Ex switch inserts in one enclosure
- Spring-to-lock or power-to-lock principle
- Holding force 1000 N
- Wiring compartment
- Special version only for gas Ex zone 2 and dust Ex zone 22 available

// EX STM 295

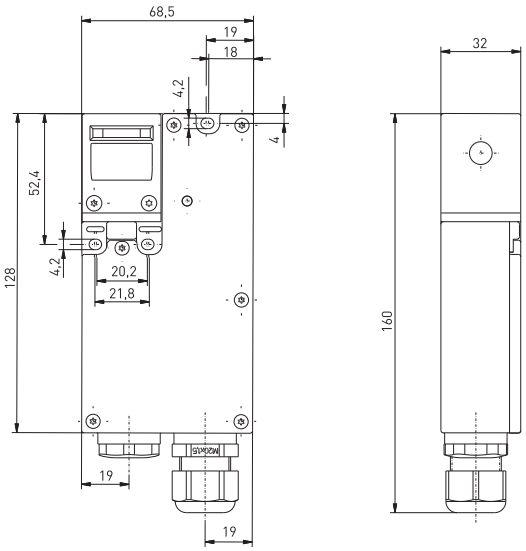

Technical data

Standards	EN 60947-5-1; EN 1088; EN 60079-0, EN 60079-1, EN 60079-7, EN 60079-18; EN 61241-0, EN 61241-1; EN ISO 13849-1
Enclosure	glass-fibre reinforced, shock-proof thermoplastic, self-extinguishing UL 94-V0
Actuator	stainless steel 1.4301
Switch insert	Ex 95
Degree of protection	IP 64 according to EN 60529
Contact material	silver
Switching system	slow action, positive break NC contact ⊖
Switching elements	2 NC and 2 NO contacts with positive break, galvanically separated contact bridges
Connection	M3 screw clamps
Cable section	max. 1.5 mm² (incl. conductor ferrules)
Cable entries	2 x M20 x 1.5 for cable section 5 ... 9 mm
B_{10d} (10 % load)	1 million
T_M	max. 20 years
U_{imp}	4 kV
U_i	250 V
I_{the}	6 A
I_e/U_e	3 A/250 VAC; 0.25 A/230 VDC
Utilisation category	AC-15; DC-13
Max. fuse rating	6 A gL/gG D-fuse
I_e/U_e solenoid	0.08 A / 24 VDC +10%/–15%
Power consumption	max. 47 W (0.25s)
Ambient temperature Ta	–20 °C ... +55 °C
Mechanical life	> 500 000 operations
Ex marking	Ⓔx II 2G Ex demb IIC T4 Gb, II 2D Ex tD A21 IP64 T100°C IECEx Ex demb IIC T4, Ex tD A21 IP64 T100°C
Approvals	BVS 10 ATEX E 053 X IECEx BVS 10

Contact variants: switch travel/contacts

	Spring-to-lock principle	Power-to-lock principle
2 NC/2 NO contact	Ex STM 295 2Ö/2S-R	Ex STM 295 2Ö/2S-A

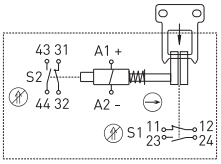

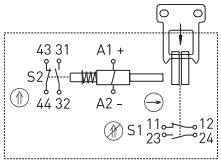

Type code

Ex STM 295 2Ö/2S-R-3G/D

- Equipment Categ. 3G/D, gas Ex zone 2 and dust Ex zone 22
- R Spring-to-lock principle, (A Power-to-lock principle)
- Contact type 2 NC/2 NO contact
- Series
- Solenoid interlock
- Ex certified component

Ex solenoid interlocks
// Series Ex STM 295, actuators

Features/Options
STM 295 AZ-B1
- Actuating radius on hinged guards
  a = 350 mm and b = 700 mm
- Axial misalignment x = 11 mm

STM 295 AZ-B5
- Especially suitable for hinged guards
- Actuating radius on hinged guards
  a = 350 mm and b = 700 mm
- Axial misalignment x = 13.5 mm

Note
The actuators are not included with the switches.

// Straight actuator STM 295 AZ-B1

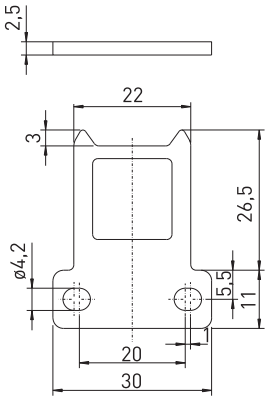

// Angled actuator STM 295 AZ-B5

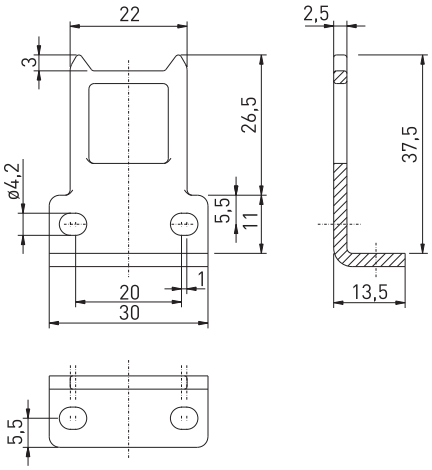

// Actuating radius

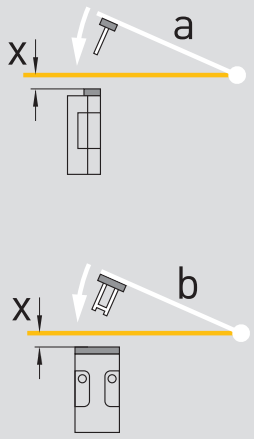

- The axis of the hinge should be x mm above the top edge of the safety switch and in the same plane
- a Actuating radius to the plane of the actuator
- b Actuating radius in line with the plane of the actuator
- x Axial misalignment

Features/Options
- Ex zone 1 and 21
- Two Ex switch inserts in one enclosure
- Spring-to-lock or power-to-lock principle
- Problem-free opening of stressed doors by means of bell-crank system
- High holding force 3.500 N
- Ball catch
- Special version only for dust Ex zone 22 available

// EX AZM 415

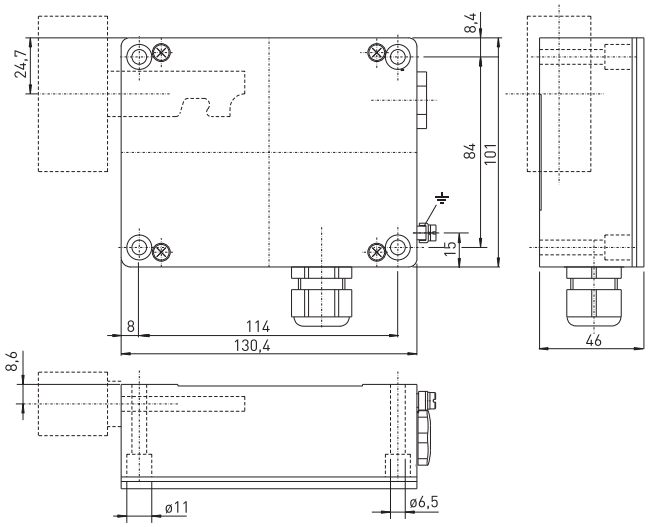

Technical data

Standards	EN 60947-5-1; EN 1088; EN 60079-0, EN 60079-1, EN 60079-7, EN 60079-18; EN ISO 13849-1
Enclosure	aluminium die casting, enamelled
Cover	steel, enamelled
Actuator/locking bolt	metal zinc/aluminium
Switch insert	Ex 95
Degree of protection	IP 67; Ex AZM 415-TE, TEI, -FE: IP64 according to EN 60529
Contact material	silver
Switching system	slow action, positive break NC contact ⊖
Switching elements	change-over contact with double break Zb, galvanically separated contact bridges
Connection	M3 screw clamps
Cable section	max. 2.5 mm² (incl. conductor ferrules)
Cable entries	2 x M20 x 1.5 for cable section 5 ... 9 mm
B_{10d} (10 % load)	2 million
T_M	max. 20 years
U_{imp}	4 kV
U_i	250 V
I_{the}	6 A
Ie/Ue	6 A/250 VAC; 0.25 A/230 VDC
Utilisation category	AC-15
Max. fuse rating	6 A gL/gG D-fuse
I_e/U_e solenoid	0.08 A / 24 VDC ±10%
Power consumption	max. 12 W (0.25s)
Amb. temperature Ta	T6: –20 °C ... +40 °C; T5: –20 °C ... +55 °C
Mechanical life	> 1 million operations
Holding force F	max. 3500 N
Holding force of integrated ball catch	50 - 200 N, adjustable
Ex marking	Ⓔx II 2G Ex demb IIC T6/T5 Gb, II 2D Ex tb IIIC T80°C/T95°C Db IECEx Ex demb IIC T6/T5 Gb, Ex tb IIIC T80°C/T95°C Db
Approvals	DMT 02 ATEX E 255 X, IECEx BVS 07.0018X

Contact variants: switch travel/contacts

	Spring-to-lock principle	Power-to-lock principle
2 NC/2 NO contact	Ex AZM 415 2Ö/2S-R	Ex AZM 415 2Ö/2S-A
	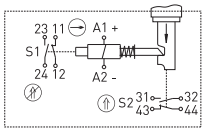	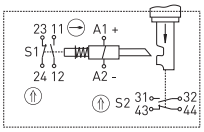

Type code

Ex AZM 415 2Ö/2S-R-TEI-FE-3D

- Equipm. Cat. 3D, dust Ex zone 22
- auxiliary unlocking
- emergency unlocking, device inside hazard. area (TE device outside haz. area)
- R Spring-to-lock principle, (A Power-to-lock principle)
- Contact type 2 NC/2 NO contacts
- Series
- Solenoid interlock
- Ex certified component

Ex solenoid interlocks
// Series Ex AZM 415, variants

Features/Options

Ex AZM 415-FE
- With auxiliary unlocking for service, maintenance, etc.
- Unlocking with M5 triangular key

Ex AZM 415-TEI
- With emergency release, actuation in case of emergency
- Unlocking by pressing a push-button
- Mounting of the device inside a hazardous area

Ex AZM 415-TEI-FE
- With emergency release and auxiliary unlocking
- Emergency release by pressing a push-button
- Auxiliary unlocking with M5 triangular key

Features/Options

- Mounting of the device inside a hazardous area

Ex AZM 415-TE
- With emergency release, actuation in case of emergency
- Unlocking by pressing a push-button
- Mounting of the device outside a hazardous area

Ex AZM 415-TE-FE
- With emergency release and auxiliary unlocking
- Unlocking by pressing a push-button
- Auxiliary unlocking with M5 triangular key
- Mounting of the device outside a hazardous area

// Ex AZM 415-FE

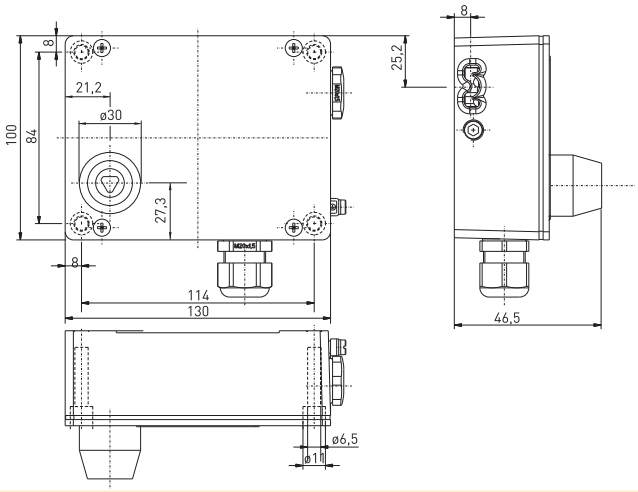

// Ex AZM 415-TEI

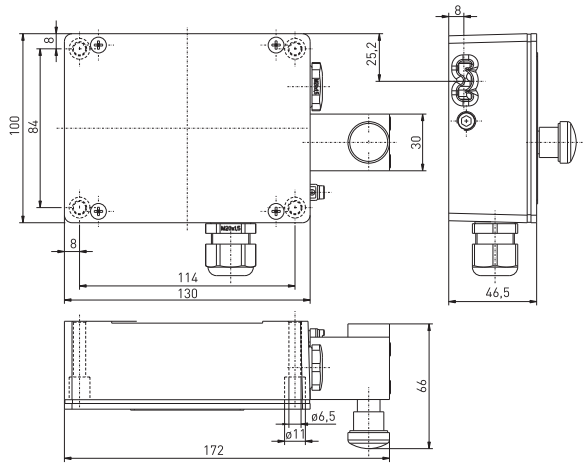

// Ex AZM 415-TE-FE

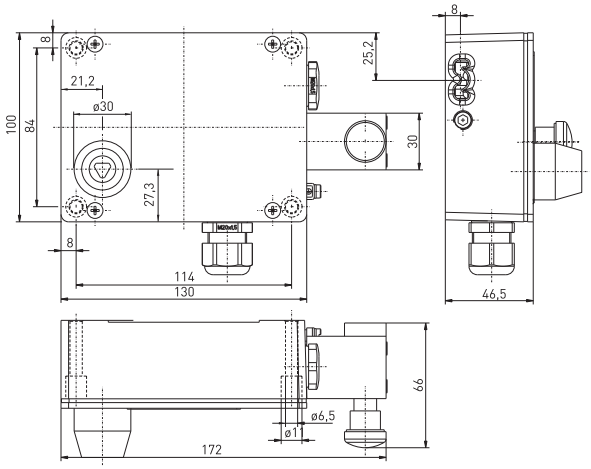

// Ex AZM 415-TE

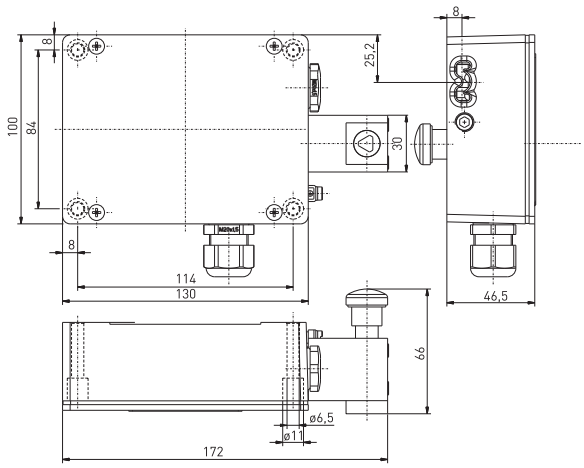

// Ex AZM 415-TE-FE

// Ex AZM 415-TE-FE

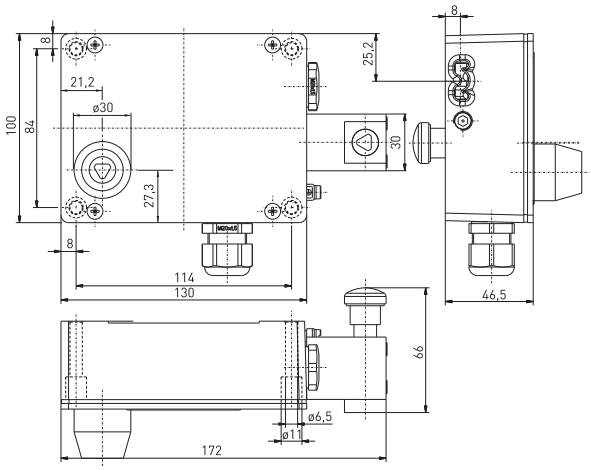

Ex solenoid interlocks
// Series Ex AZP 415

Features/Options
- Ex zone 1 and 21
- Two Ex switch inserts in one enclosure
- Release by means of pneumatic cylinder
- Problem-free opening of stressed doors by means of bell-crank system
- High holding force 3,500 N
- Ball catch
- Special version only for dust Ex zone 22 available

// EX AZP 415

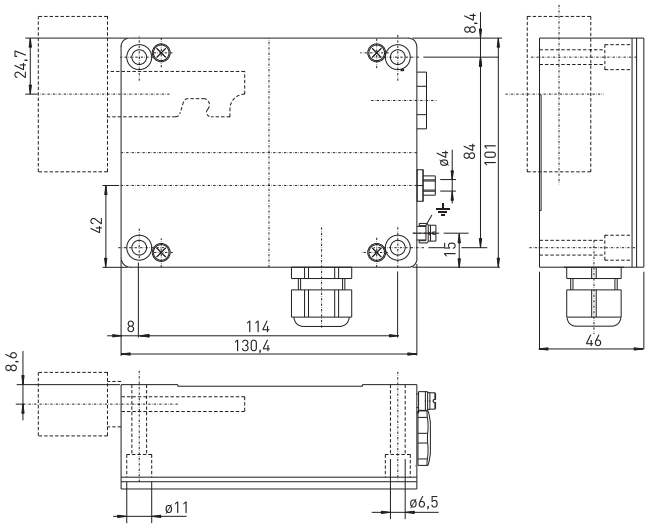

Technical data

Standards	EN 60947-5-1; EN 1088; EN 60079-0, EN 60079-1, EN 60079-7, EN ISO 13849-1
Enclosure	aluminium die casting, enamelled
Cover	steel, enamelled
Actuator/locking bolt	metal zinc/aluminium
Switch insert	Ex 95
Degree of protection	IP 67 according to EN 60529
Contact material	silver
Switching system	slow action, positive break NC contact ⊖
Switching elements	change-over contact with double break Zb, galvanically separated contact bridges
Connection	M3 screw clamps
Cable section	max. 2.5 mm^2 (incl. conductor ferrules)
Cable entries	2 x M20 x 1.5 for cable section 5 ... 9 mm
B_{10d} (10 % load)	2 million
T_M	max. 20 years
U_{imp}	4 kV
U_i	250 V
I_{the}	6 A
Ie/Ue	6 A/250 VAC; 0.25 A/230 VDC
Utilisation category	AC-15
Max. fuse rating	6 A gL/gG D-fuse
Unlocking	Pneumatic cylinder, max. 3 - 7 bar permitted
Ambient temperature Ta	T6: –20 °C ... +40 °C; T5: –20 °C ... +55 °C
Mechanical life	> 1 million operations
Holding force F	max. 3500 N
Holding force of integrated ball catch	50 - 200 N, adjustable
Ex marking	Ⓔx II 2G Ex de IIC T6/T5 Gb, II 2D Ex tb IIIC T80°C/T95°C Db IECEx Ex de IIC T6/T5 Gb, Ex tb IIIC T80°C/T95°C Db
Approvals	DMT 02 ATEX E 255 X; IECEx BVS 07.0018 X

Contact variants: switch travel/contacts

	Actuation with air supply off
2 NC/2 NO contact	Ex AZP 415 2Ö/2S

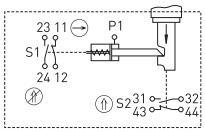

Type code	Ex AZP 415 2Ö/2S-3D

Equipment Categ. 3D, dust Ex zone 22
Contact type 2 NC/2 NO contacts
Series
Solenoid interlock
Ex certified component

Ex solenoid interlocks
// Series Ex AZM/AZP 415, actuators

Features/Options
AZM 415-B1
- For sliding guards
- Actuator with return spring
- Tolerates up to max. 6 mm overtravel

AZM 415-B2
- Especially suitable for sliding and hinged guards
- Actuating radius on hinged guards
  b = 250 mm, axial misalignment x = 36 mm

AZM 415-B3
- Especially suitable for sliding and hinged guards

Features/Options
- Actuating radius on hinged guards
  a = 250 mm, axial misalignment x = 36 mm

Note
- The actuators are not included with the switches.
- Removal of the actuator can be prevented by fitting dowel pins in the holes provided.
- The distance between the flange of the actuator and the switch enclosure must be less than 3 mm when the actuator is inserted.
- Adjustment or B2 and B3 or turning hexagonal screw

// Straight actuator AZM 415-B1

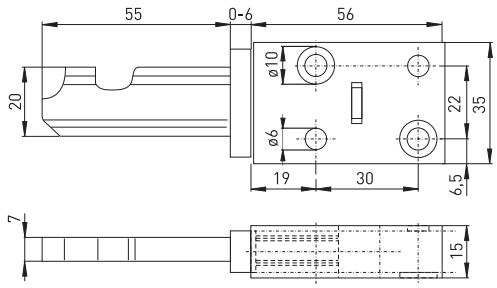

// Flexible actuator AZM 415-B2

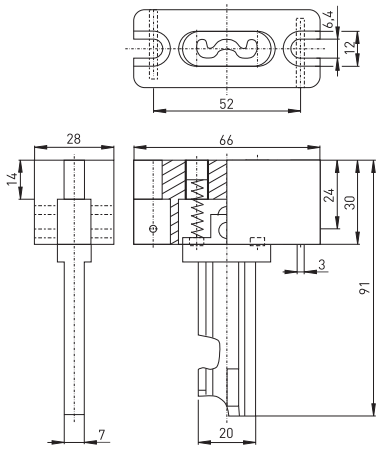

// Flexible actuator AZM 415-B3

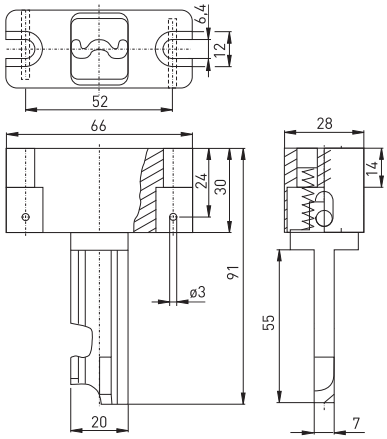

// Actuating radius

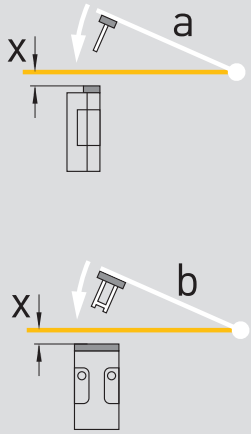

// Distance between actuator/enclosure

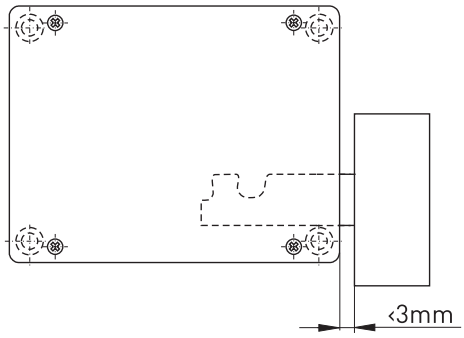

- The axis of the hinge should be x mm above the top edge of the safety switch and in the same plane
- a Actuating radius to the plane of the actuator
- b Actuating radius in line with the plane of the actuator
- x Axial misalignment

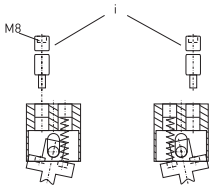

Ex solenoid interlocks
// Series Ex AZM/AZP 415, actuators

Features/Options

AZM 415-B4pS
- Suitable for all types of guards, no further handles required
- Hinge radius not to be observed
- Shearing force 25,000 N
- Mounting plate to simplify mounting, see accessories
- Lockout tag SZ 415-B4pS to prevent unintentional closing, see accessories

AZM 415-B30
- Suitable for all guard types
- Hinge radius not to be observed
- No further handles/levers required on the guard

Features/Options
- Latching actuating handle
- Emergency handle to open guard from within the guarded area: 1. Press push-button, 2. Turn emergency handle
- Shearing force 25,000 N
- Lockout tag SZ 415-1 or SZ 415-2 to prevent unintentional closing
- For door thickness max. 100 mm

AZM 415-B30-01
- With emergency handle, door hinge on right-hand side
- Actuator mounted inside, see yellow marking in drawing
- Only to be used in combination with Ex AZM 415-2Ö/2S-TEI

// Actuator AZM 415-B4pS with grip

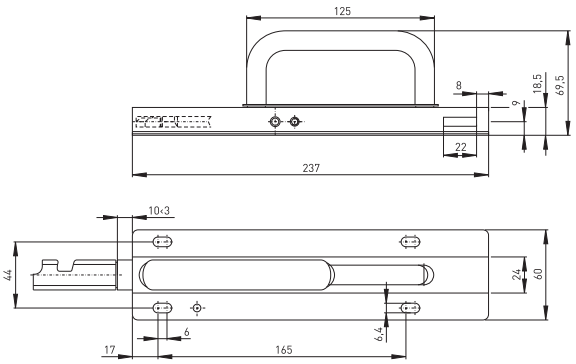

// Actuator AZM 415-B30

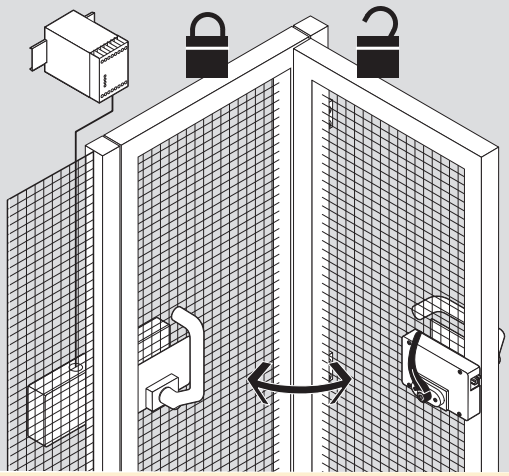

// Actuator mounted inside

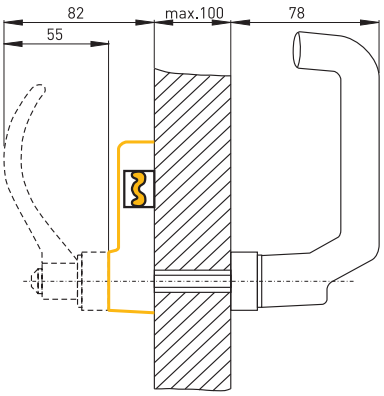

// Actuator mounted outside

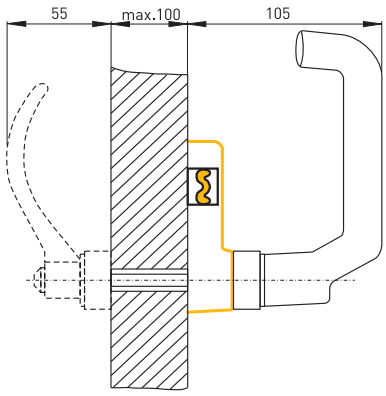

// Mounting AZM 415-B30-01

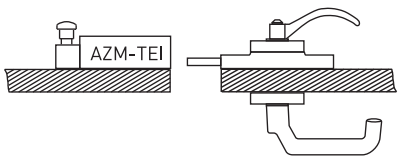

// Actuator AZM 415-B30-01

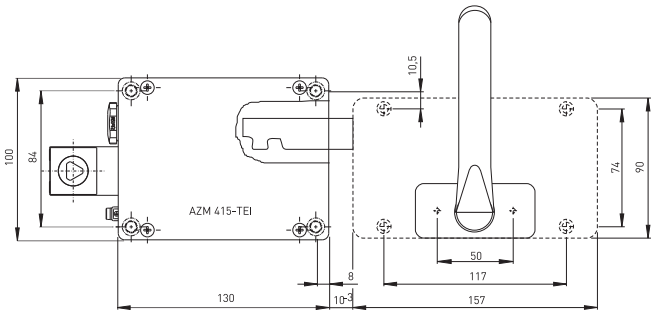

Features/Options
AZM 415-B30-02
- Actuator mounted inside, see yellow marking in drawing page 44
- With emergency handle, door hinge on left-hand side
- Only to be used in combination with Ex AZM 415-2Ö/2S-TEI

AZM 415-B30-03
- Actuator mounted inside, see yellow marking in drawing page 44
- Door hinge on right-hand side

Features/Options
AZM 415-B30-04
- Actuator mounted inside, see yellow marking in drawing page 44
- Door hinge on left-hand side

// Mounting AZM 415-B30-02

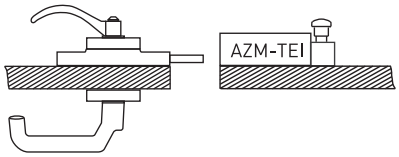

// Actuator AZM 415-B30-02

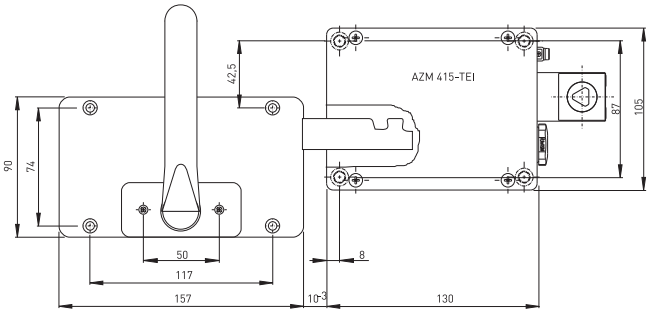

// Mounting AZM 415-B30-03

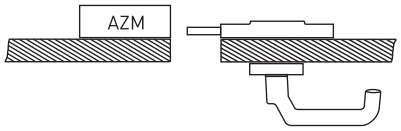

// Actuator AZM 415-B30-03

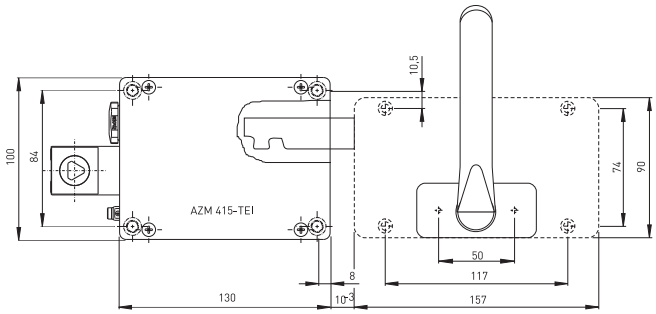

// Mounting AZM 415-B30-04

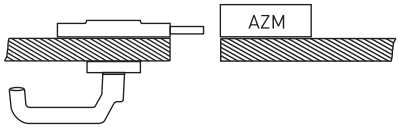

// Actuator AZM 415-B30-04

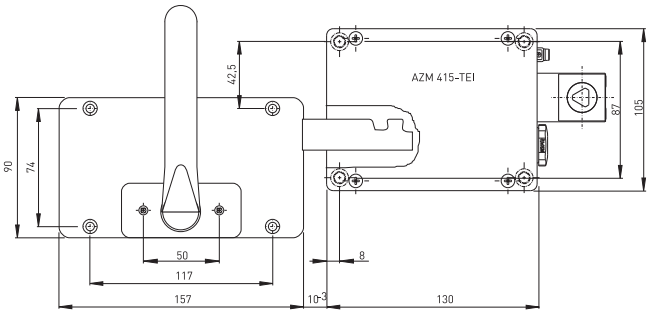

Features/Options
AZM 415-B30-05
- Actuator mounted outside, see yellow marking in drawing page 44
- Only to be used in combination with Ex AZM 415-2Ö/2S-TE
- Door hinge on right-hand side

AZM 415-B30-06
- Only to be used in combination with Ex AZM 415-2Ö/2S-TE
- Actuator mounted outside, see yellow marking in drawing page 44
- Door hinge on left-hand side

Features/Options
AZM 415-B30-07
- Actuator mounted outside, see yellow marking in drawing page 44
- Door hinge on right-hand side

// Mounting AZM 415-B30-05

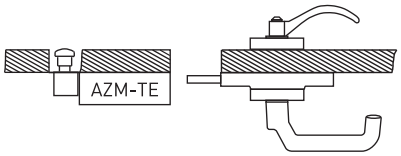

// Actuator AZM 415-B30-05

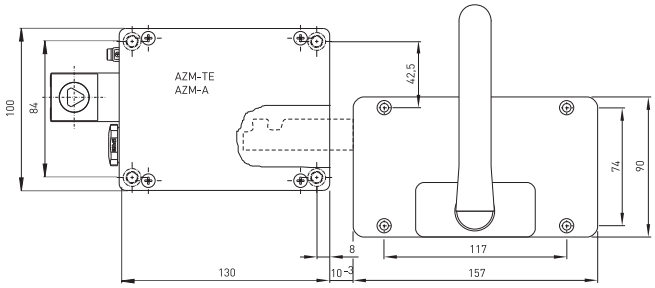

// Mounting AZM 415-B30-06

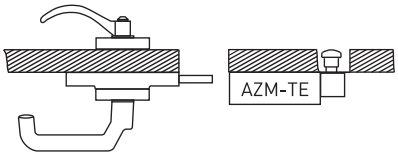

// Actuator AZM 415-B30-06

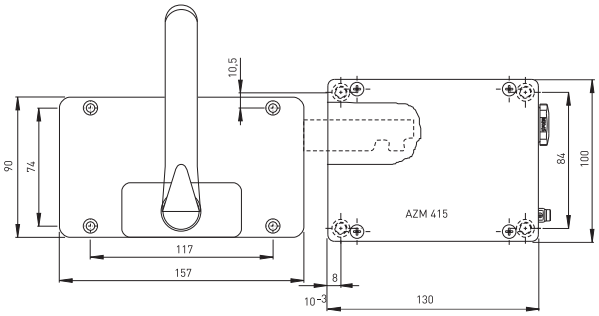

// Mounting AZM 415-B30-07

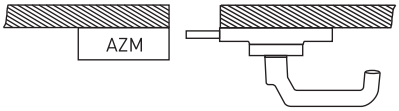

// Actuator AZM 415-B30-07

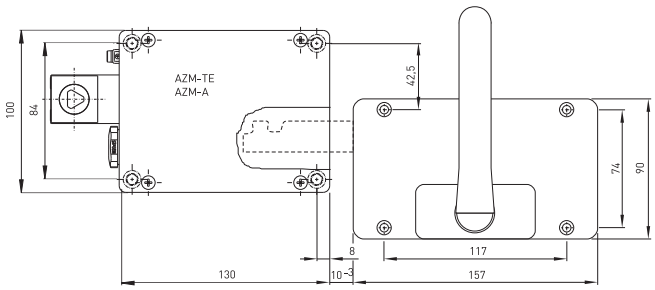

Features/Options
AZM 415-B30-08
- Actuator mounted outside, see yellow marking in drawing page 44
- Door hinge on left-hand side

Lockout tag SZ 415-1/-2
- To prevent inadvertent closing, e.g. during maintenance, by preventing actuating of the switch
- Suitable for mounting inside and outside the hazardous area
- SZ 415-1 for versions: AZM 415-B30-01, -03, -06 and -08
- SZ 415-2 for versions: AZM 415-B30-02, -04, -05 and -07
- Shown version SZ 415-1, version SZ 415-2 mirror-image

Features/Options
Lockout tag SZ 415-B4pS
- For actuator AZM 415-B4pS
- To prevent inadvertent closing, e.g. during maintenance, by preventing actuating of the switch
- With chain to fix on actuator, length of chain 500 mm

Mounting plate MP
- For simple mounting on profile systems, e.g. 40, 60 or 80 mm wide
- Thickness of plate 5 mm
- MP AZM 415-22: Mounting of AZM 415 or AZP 415
- MP AZM 415-B30: Mounting of a door or an emergency handle

// Mounting AZM 415-B30-08

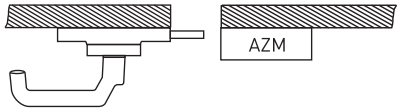

// Actuator AZM 415-B30-08

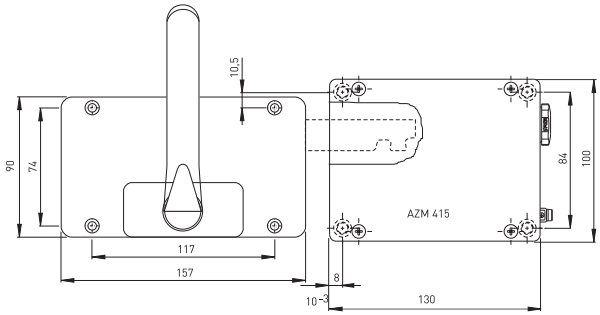

// Lockout tag SZ 415-1/-2

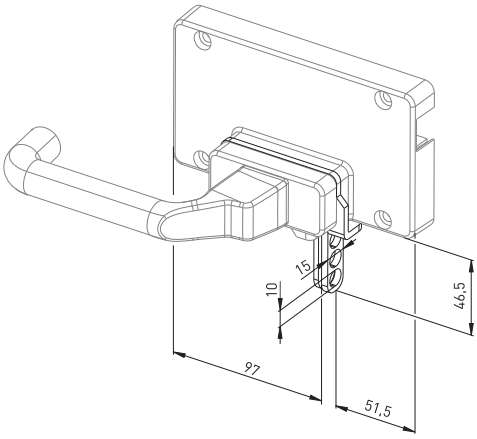

// Lockout tag SZ 415-B4pS

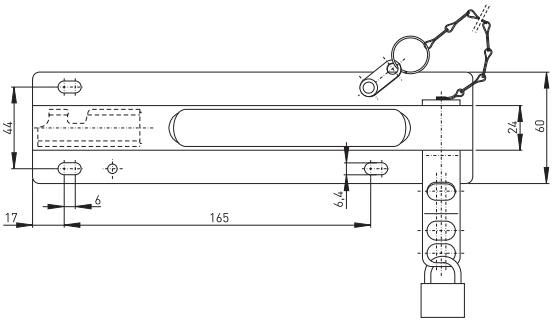

// Mounting plate MP AZM 415-22

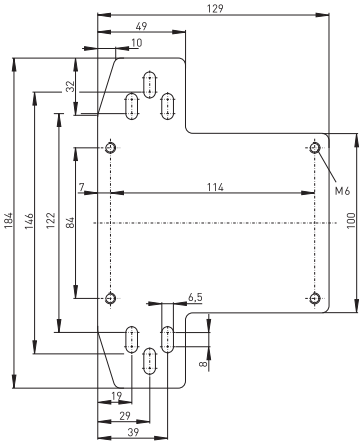

// Mounting plate MP AZM 415-B30

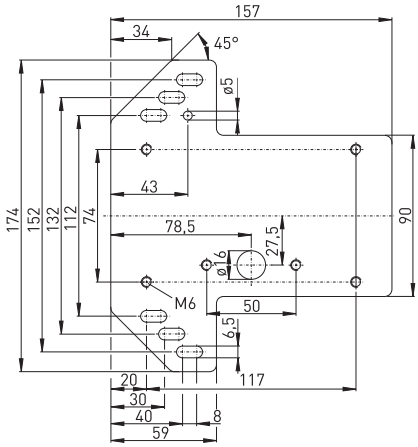

Ex solenoid interlocks
// Series Ex AZM/AZP 415, accessories

Features/Options

Mounting plate MP

- For simple mounting on profile systems, e.g. 40, 60 or 80 mm wide
- Thickness of plate 5 mm
- Mounting plate MP AZM 415-B4pS: Mounting of AZM 415-B4pS

// Mounting plate MP AZM 415-B4pS

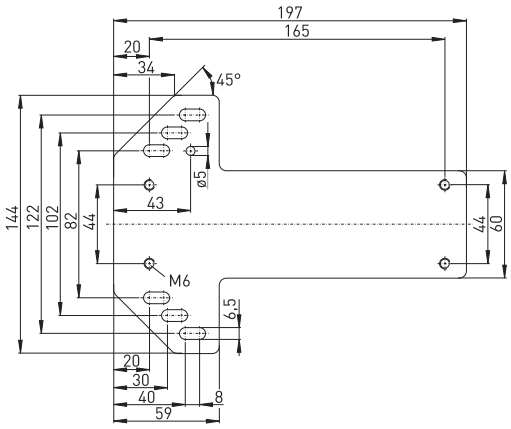


DECKEL MAHO

Ex 14 R

Ex position switches with safety function

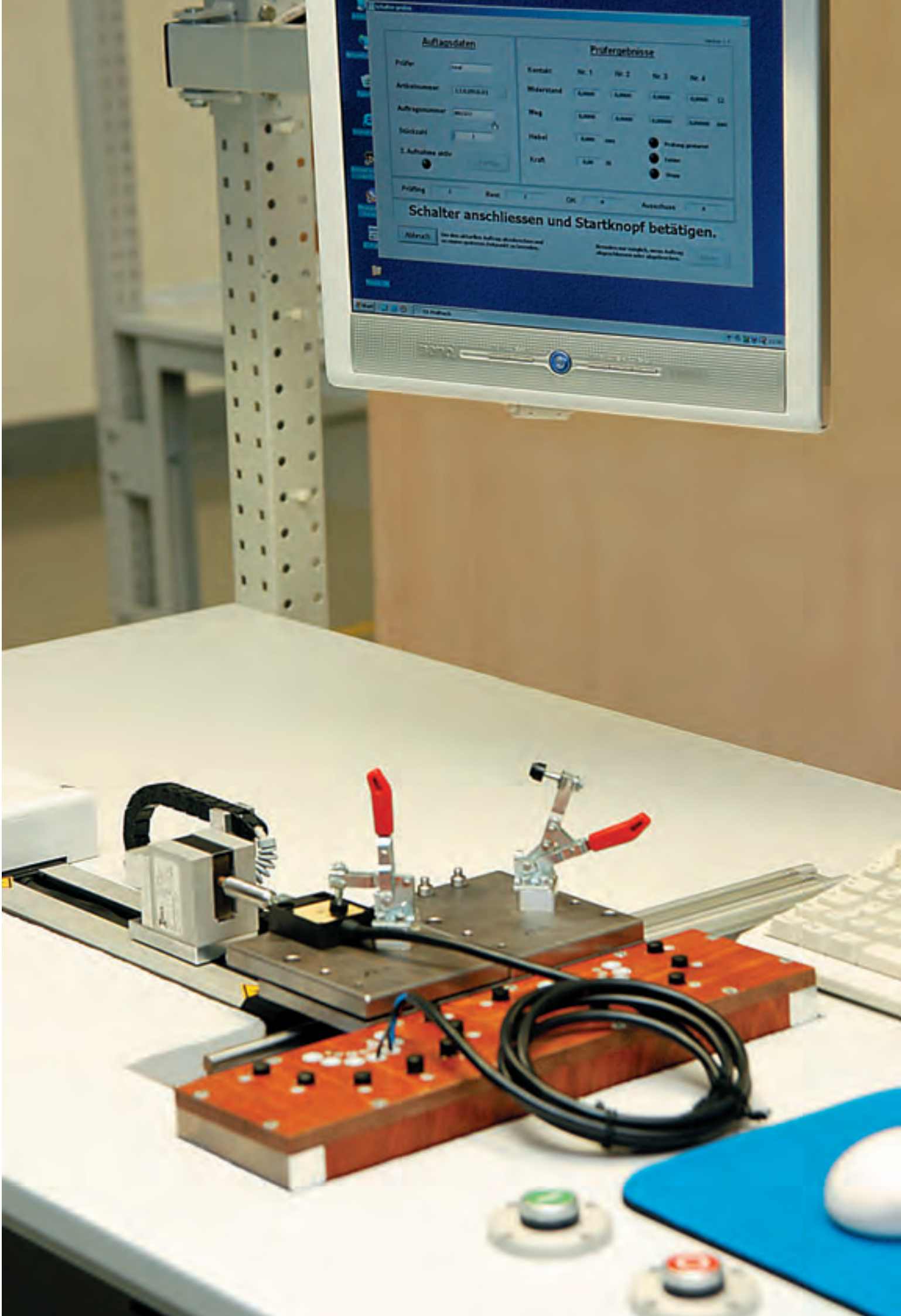
Auftragsdaten
Prüfergebnisse
Schalter anschliessen und Startknopf betätigen.

Ex position switches with safety function

Range of application

These Ex safety position switches are suitable for sliding and hinged safety guards, which need to be closed to ensure the necessary operational security. In combination with guard door monitors, all Ex switches shown in this chapter achieve Control Category 3 or 4 to EN 954-1.

Further applications for Ex safety position switches are the most varied positioning duties. The variety of requirements to be found in practice can be met in detail by means of a wide range of actuating elements.

Design and operating principle

On the Ex safety position switches, the guard device and the positive break NC contact are positively linked. When the guard device is closed, the position switch is not actuated. On sliding guards one switch is actuated and one switch is not actuated so that there is a change when opening and closing the guard door. A choice of various versions with snap or slow action is available.

The Ex safety position switches can be mounted in any desired mounting position.

All Ex position switches with safety function shown in this chapter bear the CE mark according to the Machinery Directive 2006/42/EC and according to ATEX 94/9/EC. The Ex position switches with safety function per equipment category 3D bear the CE mark without the number of the notified body and have received a CE declaration of manufacturer conformity.

Application

on sliding guards

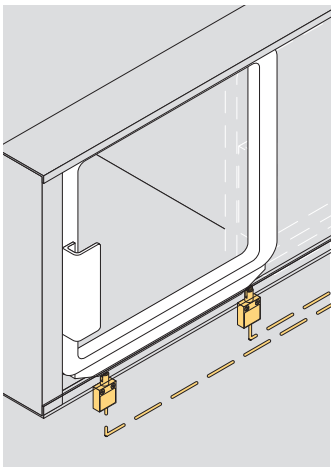

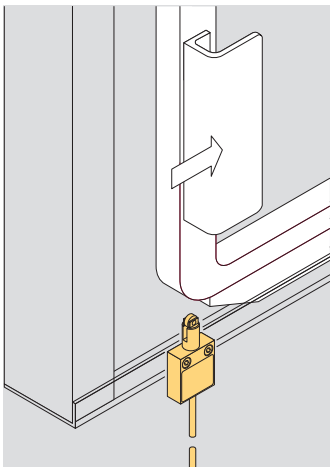

on hinged guards

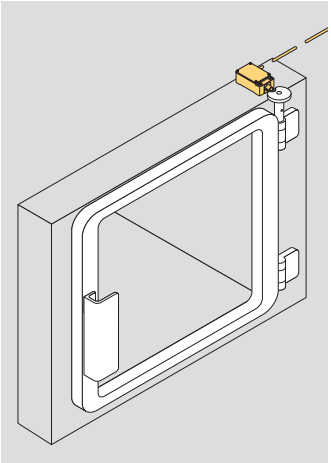

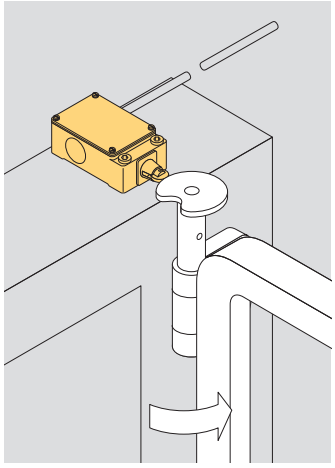

Legend

α: Actuating angle from below as shown in picture

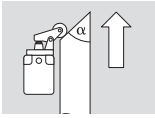

α: Actuating angle from right of switch axis

β: Actuating angle from left of switch axis with reference to lever position as shown in picture

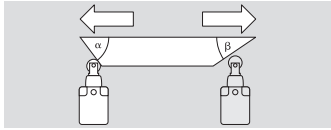

Selection table
Ex position switches with safety function

// Series		// Actuator					
		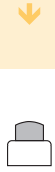					
Ex 13, from page 56 - Thermoplastic enclosure - Cable IECEx	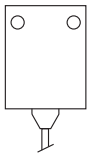	+ W	F	KU WKU	FKU		
Ex 14, from page 66 - Thermoplastic enclosure - Cable IECEx	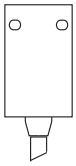	+ W	F	KU WKU	FKU	VKU	
Ex 95, from page 74 - Thermoplastic enclosure - Wiring compartment - 1 cable entry - Design according to DIN EN 50 047	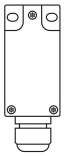	W					
Ex T 356, from page 80 - Thermoplastic enclosure with metal cover - Cable IECEx	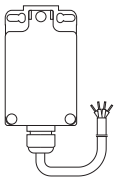	S					
Ex 335, from page 84 - Metal enclosure - Wiring compartment - 1 cable entry IECEx	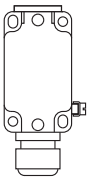	S					
Ex 355, from page 90 - Metal enclosure - Wiring compartment - 3 cable entries	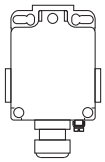	S					
Ex 61, from page 96 - Metal enclosure - Cable		W					

+ Standard: plunger without water-tight collar

← →	← →	← →	← →	← →	↑	← →	← →	← →	← →
R WR		FR		WH	WHL	WPH	D	DL	
R WR		FR	VR				D	DL	
R	RL			WH WHM	WHLM	4K WPH WPHM	D D50		
R							4VH		4V7H-2138
R				1K		3K	4VH	4V3H	4V7H-2138
R				1K		3K	4VH	4V3H	4V7H-2138
				WH	WHL	WPH			

Ex position switches with safety function
// Series Ex 13

Features/Options
- Ex zone 1 and 21
- Thermoplastic enclosure
- Double insulated ⧈
- Slow action ⊖, change-over contact with double break
- Slow action available with contact overlapping
- Suitable for in-line mounting
- With pre-wired cable, cable length 1 metre
- Special version only for dust Ex zone 22 available

// EX 13

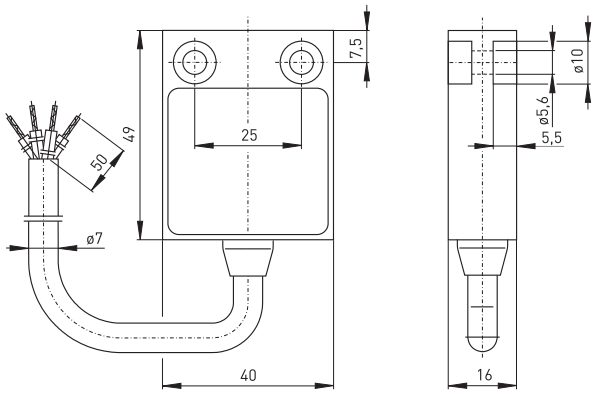

Technical data

Standards	EN 60947-5-1; EN 1088; EN 60079-0, EN 60079-1, EN 60079-31; EN ISO 13849-1
Enclosure	glass-fibre reinforced, shock-proof thermoplastic, self-extinguishing UL 94-V0
Degree of protection	IP 65 according to EN 60529
Contact material	silver
Switching system	slow action, positive break NC contact ⊖
Switching elements	change-over contact with double break Zb, galvanically separated contact bridges
Connection	cable H05VV-F, 4 x 0.75 mm²
B_{10d} (10 % load)	2 million
T_M	max. 20 years
Cable length	1, 2, 5 and 10 m
U_{imp}	4 kV
U_i	250 V
I_{the}	T6: 6 A, T5: 3 A
I_e/U_e	6 A/250 VAC; 0.25 A/230 VDC
Utilisation category	AC-15, DC-13
Max. fuse rating	6 A gL/gG D-fuse
Ambient temperature Ta	T6: –20 °C ... +65 °C, T5: –20 °C ... +95 °C
Mechanical life	> 1 million operations
Switching frequency	1800/h
Repeat accuracy	± 0.1 mm
Contact gap	max. 2 x 3.5 mm
Ex marking	Ⓔx II 2G Ex d IIC T6/T5 Gb, II 2D Ex tb IIIC T80°C/T95°C Db IECEx Ex d IIC T6/T5 Gb, Ex tb IIIC T80°C/T95°C Db
Approvals	PTB 03 ATEX 1068 X, IECEx PTB 06.0053X

Type code	Ex 13 WR 1Ö/1S-V-S-1m-3D

Equipment Categ. 3D, Staub-Ex Zone 22
Cable length 1 m, (2 m, 5 m, 10 m)
Cable entry on side
Mechanical latching
Contact type 1Ö/1S, (UE)
Actuator R (H, TK, D, etc. ...)
Collar
Series
Ex certified component

Ex position switches with safety function
// Series Ex 13

Features/Options
- Special cables possible on request
- Gold-plated contacts available on request
- Mechanical latching: locking by actuation, unlocking by pulling the unlocking button

Features/Options
- Actuating speed 0.5 m/s with an actuating angle of 0°

// Cable entry on side S

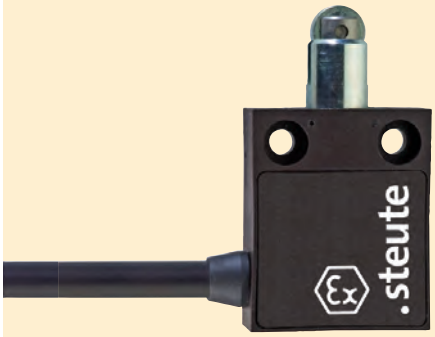

// Plunger

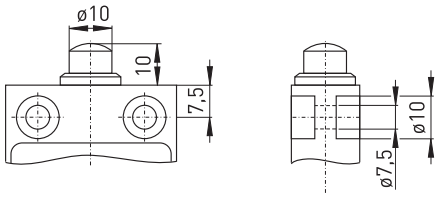

// Mechanical latching V

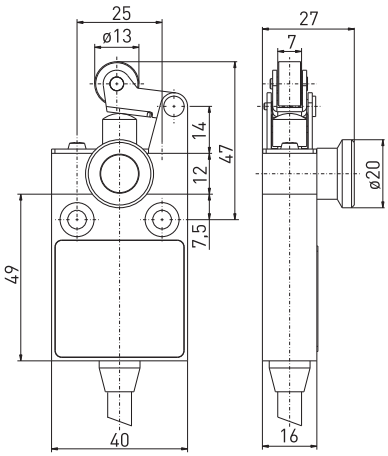

Contact variants: switch travel/contacts

	Slow action
1 NC/1 NO contact	Ex 13 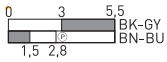

Ex position switches with safety function
// Series Ex 13, actuator

Features/Options
- Actuating speed 0.5 m/s with an actuating angle of 0°
- Collar to protect against the entry of foreign bodies

// Plunger with collar W

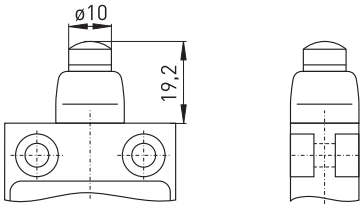

Contact variants: switch travel/contacts

	Slow action
1 NC/1 NO contact	Ex 13 W 1Ö/1S 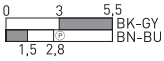

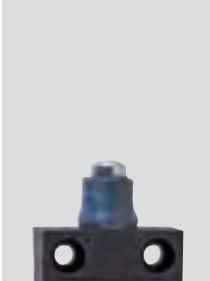

Features/Options
- Actuating speed 0.5 m/s with an actuating angle of 0°

// Plunger for front mounting F

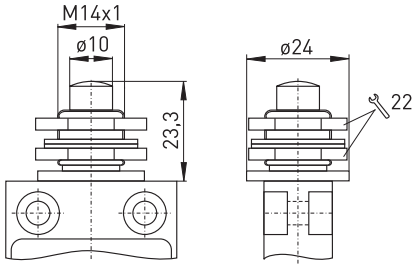

Contact variants: switch travel/contacts

	Slow action
1 NC/1 NO contact	Ex 13 F 1Ö/1S 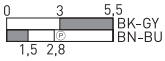

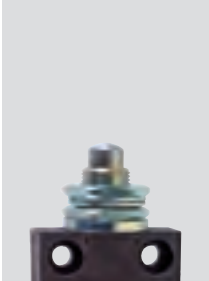

Features/Options
- Actuating speed 0.5 m/s with an actuating angle of 20°
- Can be actuated in line with or from side of switch axis
- Actuator head with captive stainless steel ball actuator
- Exact repeatability of switching point

// Ball plunger KU

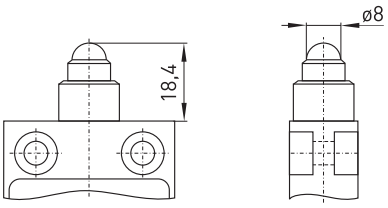

Contact variants: switch travel/contacts

	Slow action
1 NC/1 NO contact	Ex 13 KU 1Ö/1S 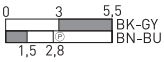

Features/Options
- Actuating speed 0.5 m/s with an actuating angle of 15°
- Can be actuated in line with or from side of switch axis
- Actuator head with captive stainless steel ball actuator
- Exact repeatability of switching point
- Collar to protect against the entry of foreign bodies

// Ball plunger with collar WKU

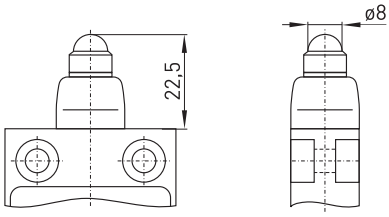

Contact variants: switch travel/contacts

	Slow action
1 NC/1 NO contact	Ex 13 WKU 1Ö/1S 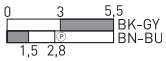

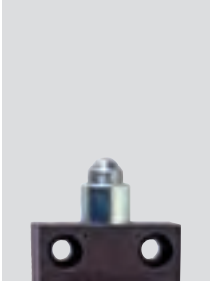

Ex position switches with safety function
// Series Ex 13, actuator

Features/Options
- Actuating speed 0.5 m/s with an actuating angle of 20°
- Can be actuated in line with or from side of switch axis
- Actuator head with captive stainless steel ball actuator
- Ball diametre: 8 mm
- Exact repeatability of switching point

Features/Options
- Actuating speed 0.5 m/s with an actuating angle of 30°
- Metal roller
- Available with actuator repositioned by 90°

// Ball plunger for front mounting FKU

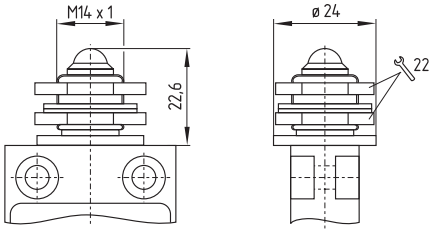

Contact variants: switch travel/contacts

	Slow action
1 NC/1 NO contact	Ex 13 FKU 1Ö/1S 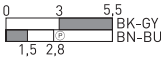

// Roller plunger R

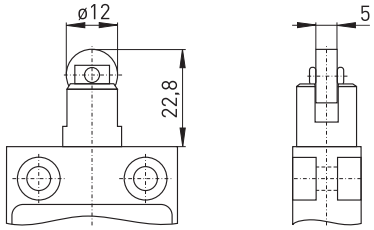

Contact variants: switch travel/contacts

	Slow action
1 NC/1 NO contact	Ex 13 R 1Ö/1S 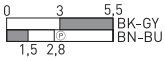

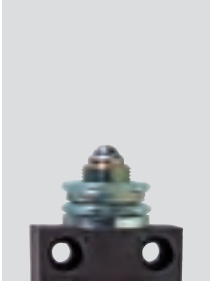

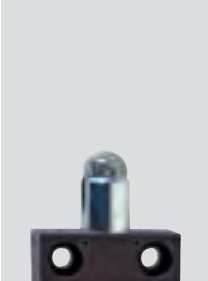

Features/Options
- Actuating speed 0.5 m/s with an actuating angle of 25°
- Metal roller
- Available with actuator repositioned by 90°
- Collar to protect against the entry of foreign bodies

// Roller plunger with collar WR

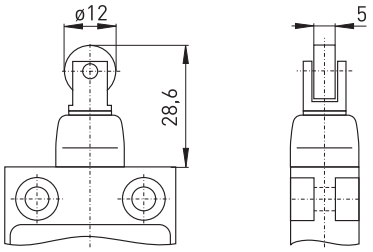

Contact variants: switch travel/contacts

	Slow action
1 NC/1 NO contact	Ex 13 WR 1Ö/1S 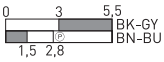

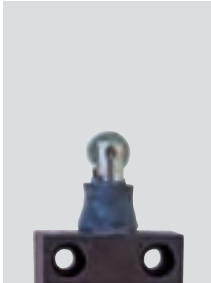

Features/Options
- Actuating speed 0.5 m/s with an actuating angle of 25°
- Metal roller
- Available with actuator repositioned by 90°

// Roller plunger for front mounting FR

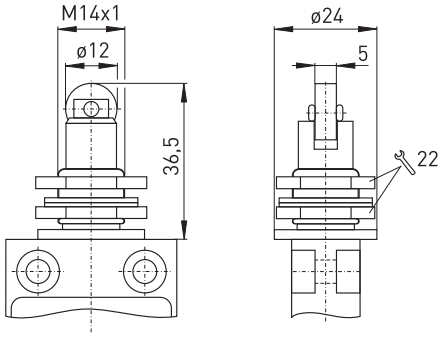

Contact variants: switch travel/contacts

	Slow action
1 NC/1 NO contact	Ex 13 FR 1Ö/1S 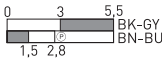

Ex position switches with safety function
// Series Ex 13, actuator

Features/Options
- Actuating speed 0.5 m/s with an actuating angle of α = 40° and β = 25°
- Metal roller
- Available with actuator repositioned by 180°
- Collar to protect against the entry of foreign bodies
- With plastic roller available on request

Note
Actuation from the left should be avoided since this reduces the mechanical life of the position switch.

// Roller lever with collar WH

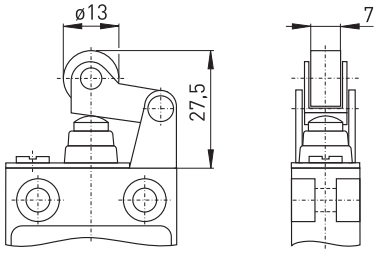

Contact variants: switch travel/contacts

	Slow action
1 NC/1 NO contact	Ex 13 WH 1Ö/1S 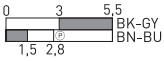

Features/Options
- Actuating speed 0.5 m/s with an actuating angle of α = 40° and β = 25°
- Metal roller
- Available with actuator repositioned by 180°
- Collar to protect against the entry of foreign bodies
- With plastic roller available on request

Note
Actuation from the left should be avoided since this reduces the mechanical life of the position switch.

// Long roller lever with collar WHL

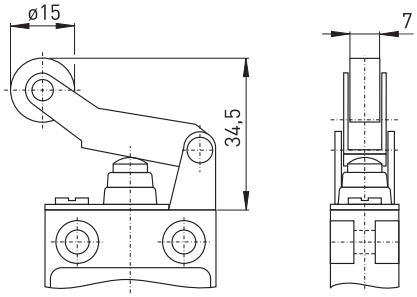

Contact variants: switch travel/contacts

	Slow action
1 NC/1 NO contact	Ex 13 WHL 1Ö/1S 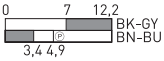

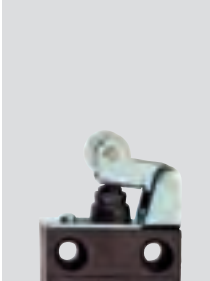

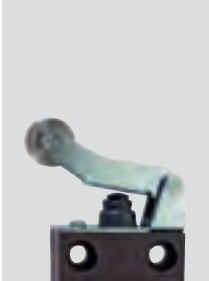

Features/Options
- Actuating speed 0.5 m/s with an actuating angle of α = 30°
- Actuation parallel to switch from below
- Metal roller
- Available with actuator repositioned by 180°
- Collar to protect against the entry of foreign bodies
- With plastic roller available on request

// Parallel roller lever with collar WPH

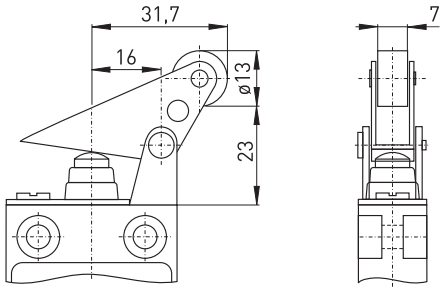

Contact variants: switch travel/contacts

	Slow action
1 NC/1 NO contact	**Ex 13 WPH 1Ö/1S** 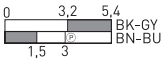

Features/Options
- Actuating speed 0.5 m/s with an actuating angle of 45°
- Wear-resistant thermoplastic roller
- Lever can be repositioned in 10° steps clockwise or counter-clockwise
- Available with actuator repositioned by 180°
- With metal roller available on request

// Rocking roller lever D

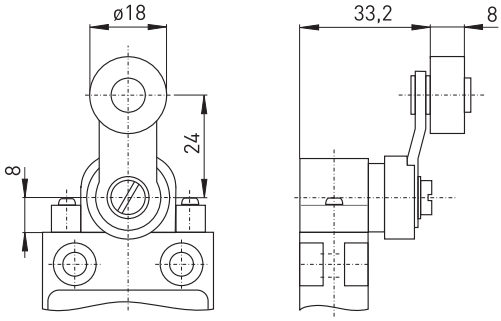

Contact variants: switch travel/contacts

	Slow action
1 NC/1 NO contact	**Ex 13 D 1Ö/1S** 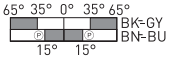

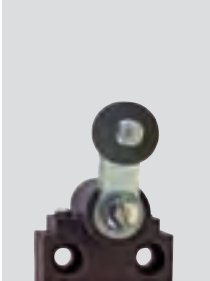

Ex position switches with safety function
// Series Ex 13, actuator

Features/Options
- Actuating speed 0.5 m/s with an actuating angle of 45°
- Wear-resistant thermoplastic roller
- Lever can be repositioned in 10° steps clockwise or counter-clockwise
- Actuator can be repositioned by 180°
- With metal roller available on request

// Long rocking roller lever DL

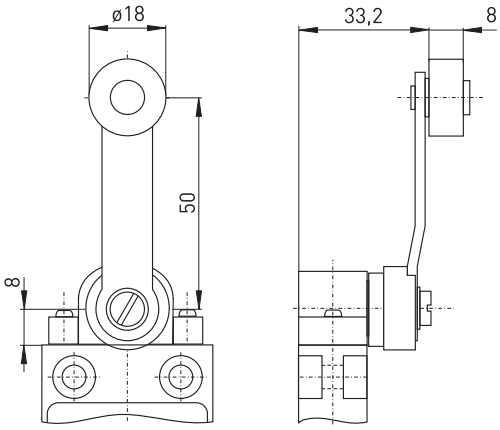

Contact variants: switch travel/contacts

	Slow action
1 NC/1 NO contact	Ex 13 DL 1Ö/1S 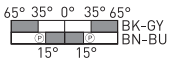

Ex position switches with safety function
// Series Ex 14

Features/Options
- Ex zone 1 and 21
- Thermoplastic enclosure
- Double insulated ⧈
- Slow action with overlapping contacts available
- Mounting details to DIN EN 50 047
- Suitable for in-line mounting
- With pre-wired cable, cable length 1 metre
- Special version only for dust Ex zone 22 available

// EX 14

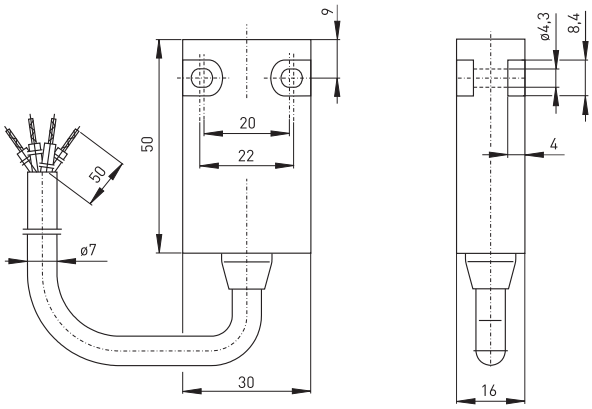

Technical data

Standards	EN 60947-5-1; EN 1088; EN 60079-0, EN 60079-1, EN 60079-31; EN ISO 13849-1
Enclosure	glass-fibre reinforced, shock-proof thermoplastic, self-extinguishing UL 94-V0
Degree of protection	IP 65 according to EN 60529
Contact material	silver
Switching system	slow action, positive break NC contact ⊖
Switching elements	change-over contact with double break Zb or 2 NC contacts, galvanically separated contact bridges
Connection	cable H05VV-F, 4 x 0.75 mm²
B_{10d} (10 % load)	2 million
T_M	max. 20 years
U_{imp}	4 kV
U_i	250 V
I_{the}	T6: 6 A, T5: 3 A
I_e/U_e	6 A/250 VAC, 0.25 A/230 VDC
Utilisation category	AC-15, DC-13
Max. fuse rating	6 A gL/gG D-fuse
Ambient temperature Ta	T6: –20 °C ... +65 °C, T5: –20 °C ... +95 °C
Mechanical life	> 1 million operations
Switching frequency	1800/h
Repeat accuracy	± 0.1 mm
Contact gap	max. 2 x 4 mm
Note	Switch must be protected from mechanical damage!
Ex marking	Ⓔx II 2G Ex d IIC T6/T5 Gb, II 2D Ex tb IIIC T80°C/T95°C Db IECEx Ex d IIC T6/T5 Gb, Ex tb IIIC T80°C/T95°C Db
Approvals	PTB 03 ATEX 1070 X, IECEx PTB 06.0098X

Type code	Ex 14 WR 1Ö/1S-RE-S-1m-3D

Equipment Categ. 3D, Staub-Ex Zone 22
Cable length 1 m, (2 m, 5 m, 10 m)
Cable entry on side
Latching
Contact type 1Ö/1S, (UE, 2Ö)
Actuator R (H, TK, D, etc. ...)
Collar
Series
Ex certified component

Ex position switches with safety function
// Series Ex 14, actuator

Features/Options
- Slow action available with 2 NC contacts
- With gold-plated contacts available on request
- With latching: On-/Off principle

Features/Options
- Actuating speed 0.5 m/s with an actuating angle of 0°

// Cable entry on side S

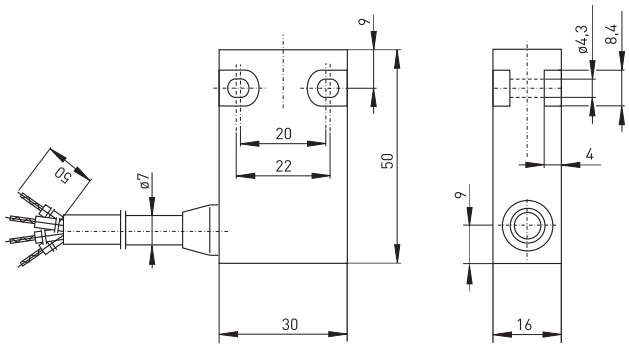

// Plunger

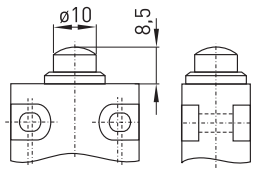

// With latching RE

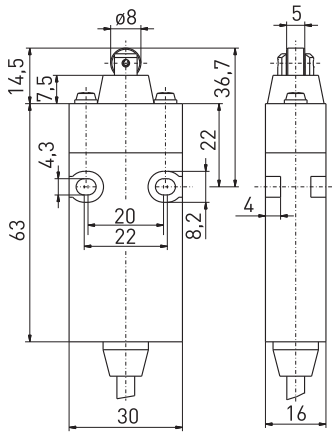

Contact variants: switch travel/contacts

	Slow action
1 NC/1 NO contact	Ex 14 1Ö/1S 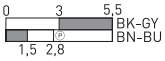
2 NC contacts	Ex 14 2Ö 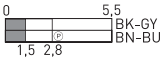

Ex position switches with safety function
// Series Ex 14, actuator

Features/Options
- Actuating speed 0.5 m/s with an actuating angle of 0°
- Collar to protect against the entry of foreign bodies

// Plunger with collar W

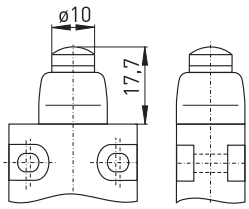

Contact variants: switch travel/contacts

	Slow action
1 NC/1 NO contact	Ex 14 W 1Ö/1S 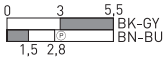
2 NC contacts	Ex 14 W 2Ö 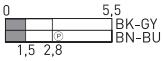

Features/Options
- Actuating speed 0.5 m/s with an actuating angle of 0°

// Plunger for front mounting F

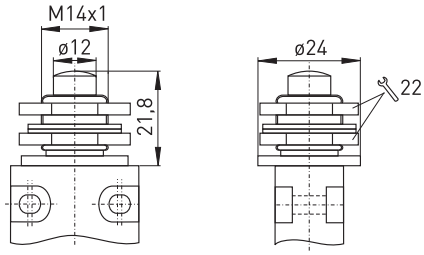

Contact variants: switch travel/contacts

	Slow action
1 NC/1 NO contact	Ex 14 F 1Ö/1S 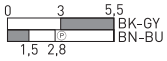
2 NC contacts	Ex 14 F 2Ö 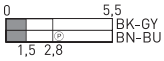

Features/Options
- Actuating speed 0.5 m/s with an actuating angle of 20°
- Can be actuated in line with or from side of switch axis
- Actuator head with captive stainless steel ball actuator
- Exact repeatability of switching point

// Ball plunger KU

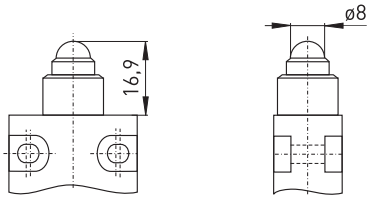

Contact variants: switch travel/contacts

	Slow action
1 NC/1 NO contact	Ex 14 KU 1Ö/1S 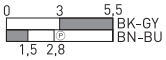
2 NC contacts	Ex 14 KU 2Ö 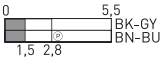

Features/Options
- Actuating speed 0.5 m/s with an actuating angle of 20°
- Can be actuated in line with or from side of switch axis
- Actuator head with captive stainless steel ball actuator
- Exact repeatability of switching point
- Collar to protect against the entry of foreign bodies

// Ball plunger with collar WKU

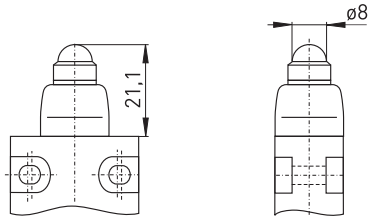

Contact variants: switch travel/contacts

	Slow action
1 NC/1 NO contact	Ex 14 WKU 1Ö/1S 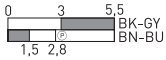
2 NC contacts	Ex 14 WKU 2Ö 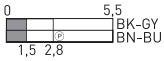

Ex position switches with safety function
// Series Ex 14, actuator

Features/Options
- Actuating speed 0.5 m/s with a vertical actuating angle of 20°
- Can be actuated in line with or from side of switch axis
- Actuator head with captive stainless steel ball actuator
- Exact repeatability of switching point

Features/Options
- Actuation from any direction
- Actuator head with captive stainless steel ball actuator

// Ball plunger for front mounting FKU

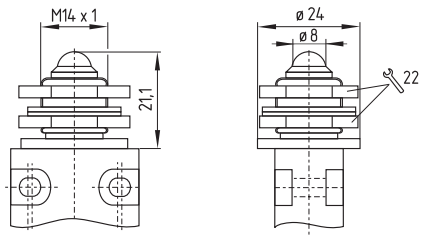

Contact variants: switch travel/contacts

	Slow action
1 NC/1 NO contact	Ex 14 FKU 1Ö/1S 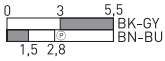
2 NC contacts	Ex 14 FKU 2Ö 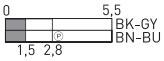

// Vertical ball plunger VKU

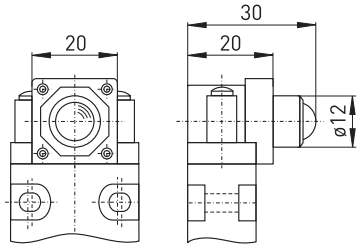

Contact variants: switch travel/contacts

	Slow action
1 NC/1 NO contact	Ex 14 VKU 1Ö/1S 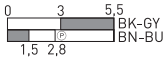
2 NC contacts	Ex 14 VKU 2Ö 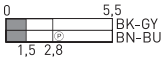

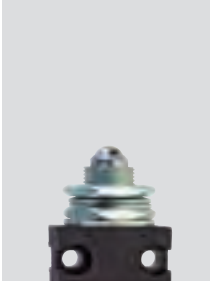

Features/Options
- Actuating speed 0.5 m/s with an actuating angle of 30°
- Metal roller
- Available with actuator repositioned by 90°

// Roller plunger R

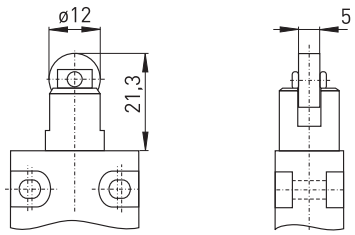

Contact variants: switch travel/contacts

	Slow action
1 NC/1 NO contact	Ex 14 R 1Ö/1S 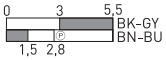
2 NC contacts	Ex 14 R 2Ö 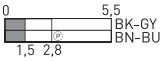

Features/Options
- Actuating speed 0.5 m/s with an actuating angle of 25°
- Metal roller
- Available with actuator repositioned by 90°
- Collar to protect against the entry of foreign bodies

// Roller plunger with collar WR

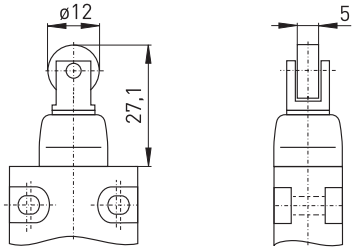

Contact variants: switch travel/contacts

	Slow action
1 NC/1 NO contact	Ex 14 WR 1Ö/1S 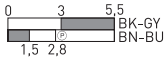
2 NC contacts	Ex 14 WR 2Ö 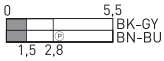

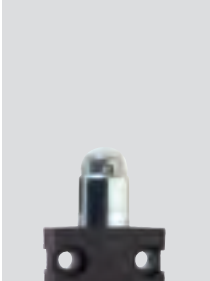

Ex position switches with safety function
// Series Ex 14, actuator

Features/Options
- Actuating speed 0.5 m/s with an actuating angle of 25°
- Metal roller
- Available with actuator repositioned by 90°

Features/Options
- Available with actuator repositioned by 90°
- Wear-resistant thermoplastic roller

// Roller plunger for front mounting FR

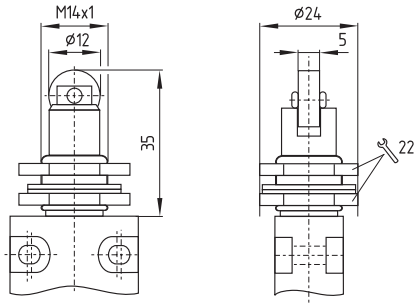

// Vertical roller plunger VR

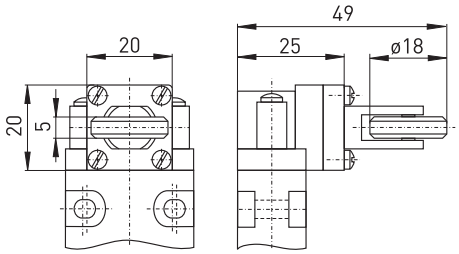

Contact variants: switch travel/contacts

	Slow action
1 NC/1 NO contact	Ex 14 FR 1Ö/1S 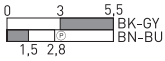
2 NC contacts	Ex 14 FR 2Ö 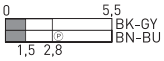

Contact variants: switch travel/contacts

	Slow action
1 NC/1 NO contact	Ex 14 VR 1Ö/1S 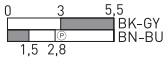
2 NC contacts	Ex 14 VR 2Ö 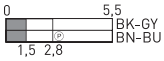

Features/Options
- Actuating speed 0.5 m/s with an actuating angle of 45°
- Wear-resistant thermoplastic roller
- Lever can be repositioned in 10° steps clockwise or counter-clockwise
- Actuator can be repositioned by 180°
- With metal roller available on request

// Rocking roller lever D

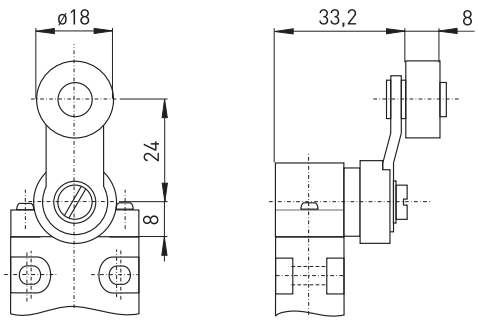

Contact variants: switch travel/contacts

	Slow action
1 NC/1 NO contact	**Ex 14 D 1Ö/1S** 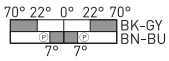
2 NC contacts	**Ex 14 D 2Ö** 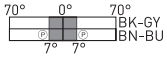

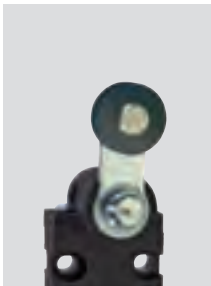

Features/Options
- Actuating speed 0.5 m/s with an actuating angle of 45°
- Wear-resistant thermoplastic roller
- Lever can be repositioned in 10° steps clockwise or counter-clockwise
- Actuator can be repositioned by 180°
- With metal roller available on request

// Long rocking roller lever DL

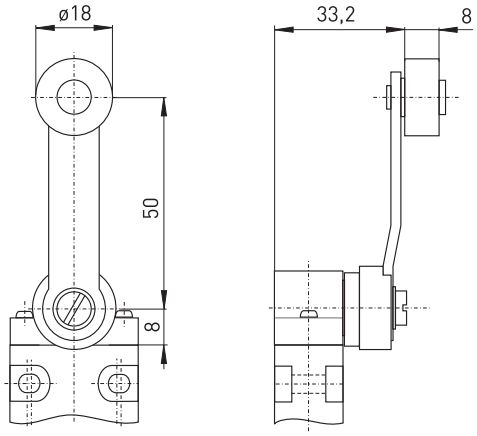

Contact variants: switch travel/contacts

	Slow action
1 NC/1 NO contact	**Ex 14 DL 1Ö/1S** 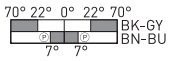
2 NC contacts	**Ex 14 DL 2Ö** 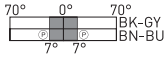

Ex position switches with safety function
// Series Ex 95

Features/Options
- Ex zone 1 and 21
- Thermoplastic enclosure
- Design according to DIN EN 50 047
- Wiring compartment
- Double insulated ⧈
- Available with overlapping contacts
- Actuator heads can be repositioned in 4 x 90° steps
- Angle of offset roller lever can be adjusted in 10° steps
- With gold-plated contacts available on request
- Special version only for dust Ex zone 22 available

// EX 95

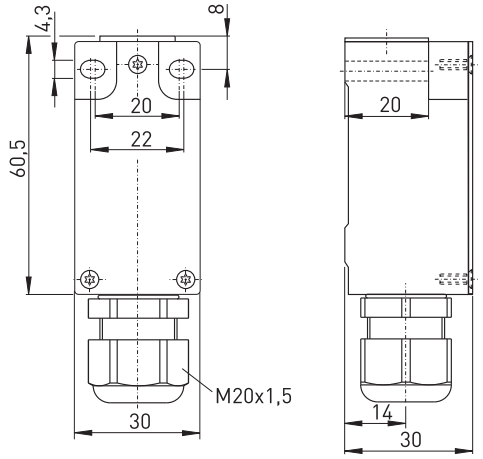

Technical data

Standards	EN 60947-5-1; EN 1088; EN 60079-0, EN 60079-1, EN 60079-7; EN 61241-0, EN 61241-1; EN ISO 13849-1
Design	DIN EN 50 047
Enclosure	glass-fibre reinforced, shock-proof thermoplastic, self-extinguishing UL 94-V0
Switch insert	Ex 95
Degree of protection	IP 67 according to EN 60529
Contact material	silver
Switching system	slow action, positive break NC contact ⊖
Switching elements	change-over contact with double break Zb or 2 NC contacts, galvanically separated contact bridges
Connection	M3 screw clamps
Cable section	max. 1.5 mm² (incl. conductor ferrules)
B_{10d} (10 % load)	2 million
T_M	max. 20 years
U_{imp}	4 kV
U_i	250 V
I_{the}	6 A
I_e/U_e	6 A/250 VAC; 0.25 A/230 VDC
Utilisation category	AC-15, DC-13
Max. fuse rating	6 A gL/gG D-fuse
Ambient temperature Ta	–20 °C ... +60 °C
Mechanical life	> 1 million operations
Switching frequency	3600/h
Repeat accuracy	± 0.1 mm
Contact gap	max. 2 x 3.5 mm
Ex marking	Ⓔx II 2G Ex de IIC T6, II 2D Ex td A21 IP67 T80°C
Approvals	DMT 01 ATEX E 118; IECEx in 2011

Type code **Ex 95 WH 1Ö/1S-3D**

- 3D: Equipment Categ. 3D, dust Ex zone 22
- 1Ö/1S: Contact type 1Ö/1S, (2Ö, UE)
- H: Actuator H (R, D, DS, etc. ...)
- W: Collar
- 95: Series
- Ex: Ex certified component

Ex position switches with safety function
// Series Ex 95, actuator

Features/Options
- Actuator type B to DIN EN 50 047
- Actuator with collar

Features/Options
- Actuator type C to DIN EN 50 047
- Wear-resistant thermoplastic roller
- Metal roller available on request
- Actuator heads can be repositioned in 4 x 90° steps

// Plunger W

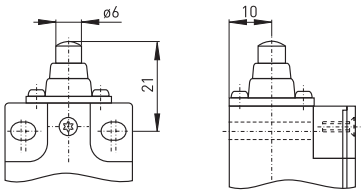

Contact variants: switch travel/contacts

	Slow action
1 NC/1 NO contact	Ex 95 W 1Ö/1S 
1 NC/1 NO contact with overlapping	Ex 95 W UE 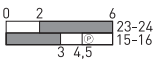
2 NC contacts	Ex 95 W 2Ö 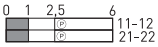

// Roller plunger R

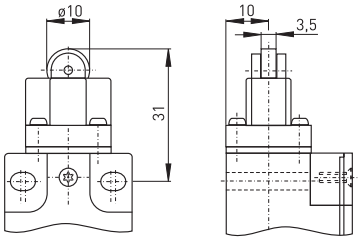

Contact variants: switch travel/contacts

	Slow action
1 NC/1 NO contact	Ex 95 R 1Ö/1S 
1 NC/1 NO contact with overlapping	Ex 95 R UE 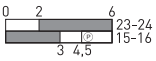
2 NC contacts	Ex 95 R 2Ö 

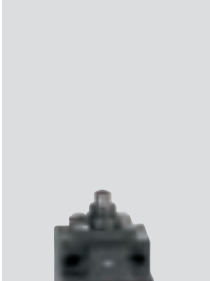

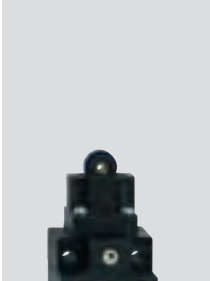

Ex position switches with safety function
// Series Ex 95, actuator

Features/Options
- Wear-resistant thermoplastic roller
- Metal roller available on request
- Actuator heads can be repositioned in 4 x 90° steps

// Long roller plunger RL

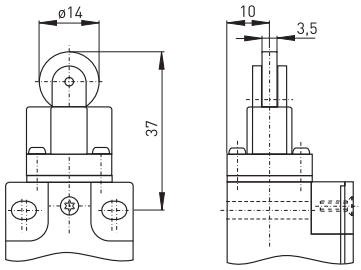

Contact variants: switch travel/contacts

	Slow action
1 NC/1 NO contact	Ex 95 RL 1Ö/1S 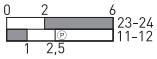
1 NC/1 NO contact with overlapping	Ex 95 RL UE 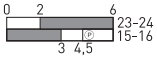
2 NC contacts	Ex 95 RL 2Ö 

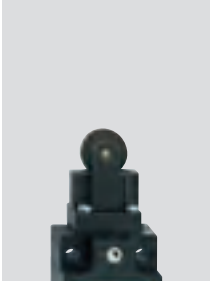

Features/Options
- Actuating speed 0.5 m/s with an actuating angle of α = 40° and β = 25°
- Actuator type E to DIN EN 50 047
- Actuator with collar
- Wear-resistant thermoplastic roller
- Actuator heads can be repositioned in 4 x 90° steps
- Metal roller available on request

Note
Actuation from left should be avoided since this reduces the mechanical life of the position switch.

// Roller lever WH

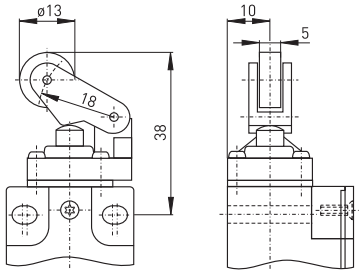

Contact variants: switch travel/contacts

	Slow action
1 NC/1 NO contact	Ex 95 WH 1Ö/1S 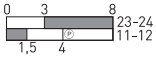
1 NC/1 NO contact with overlapping	Ex 95 WH UE 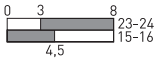
2 NC contacts	Ex 95 WH 2Ö 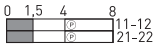

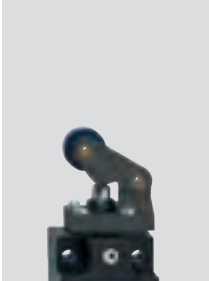

Features/Options
- Actuating speed 0.5 m/s with an actuating angle of α = 40° and β = 25°
- Actuator with collar
- Wear-resistant thermoplastic roller
- Actuator heads can be repositioned in 4 x 90° steps
- Metal roller available on request

Note
Actuation from left should be avoided since this reduces the mechanical life of the position switch.

// Metal roller lever WHM

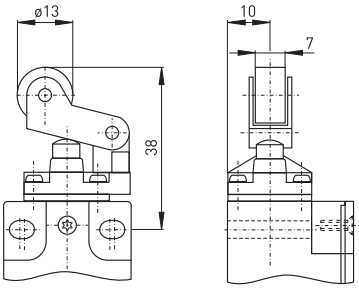

Contact variants: switch travel/contacts

	Slow action
1 NC/1 NO contact	**Ex 95 WHM 1Ö/1S** 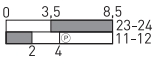
1 NC/1 NO contact with overlapping	**Ex 95 WHM UE** 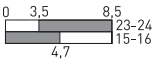
2 NC contacts	**Ex 95 WHM 2Ö** 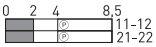

Features/Options
- Actuating speed 0.5 m/s with an actuating angle of α = 40°
- Actuator with collar
- Wear-resistant thermoplastic roller
- Actuator heads can be repositioned in 4 x 90° steps
- Metal roller available on request

Note
Actuation from left should be avoided since this reduces the mechanical life of the position switch.

// Long metal roller lever WHLM

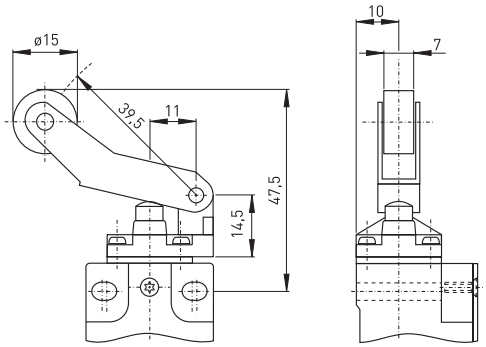

Contact variants: switch travel/contacts

	Slow action
1 NC/1 NO contact	**Ex 95 WHLM 1Ö/1S** 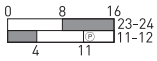
1 NC/1 NO contact with overlapping	**Ex 95 WHLM UE** 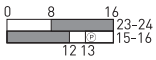
2 NC contacts	**Ex 95 WHLM 2Ö** 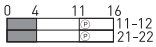

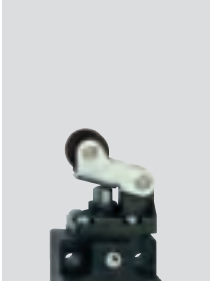

Ex position switches with safety function
// Series Ex 95, actuator

Features/Options
- Actuating speed 0.5 m/s with an actuating angle of α = 40°
- Actuation parallel to switch from left
- Wear-resistant thermoplastic roller
- Actuator heads can be repositioned in 4 x 90° steps

Features/Options
- Actuating speed 0.5 m/s with an actuating angle of α = 30°
- Actuation parallel to switch from below
- Actuator with collar
- Wear-resistant thermoplastic roller
- Actuator heads can be repositioned in 4 x 90° steps
- Metal roller available on request

// Thermoplastic roller lever 4K

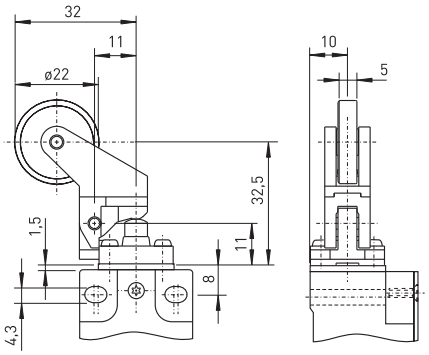

// Parallel roller lever WPH

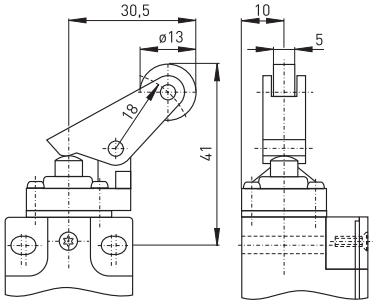

Contact variants: switch travel/contacts

	Slow action
1 NC/1 NO contact	Ex 95 4K 1Ö/1S 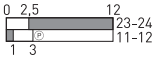
1 NC/1 NO contact with overlapping	Ex 95 4K UE 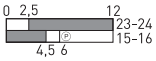
2 NC contacts	Ex 95 4K 2Ö 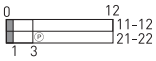

Contact variants: switch travel/contacts

	Slow action
1 NC/1 NO contact	Ex 95 WPH 1Ö/1S 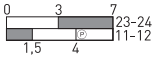
1 NC/1 NO contact with overlapping	Ex 95 WPH UE 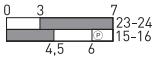
2 NC contacts	Ex 95 WPH 2Ö 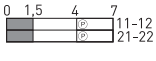

Features/Options
- Actuating speed 0.5 m/s with an actuating angle of α = 30°
- Actuation parallel to switch from below
- Actuator with collar
- Wear-resistant thermoplastic roller
- Actuator heads can be repositioned in 4 x 90° steps
- Metal roller available on request

// Metal parallel roller lever WPHM

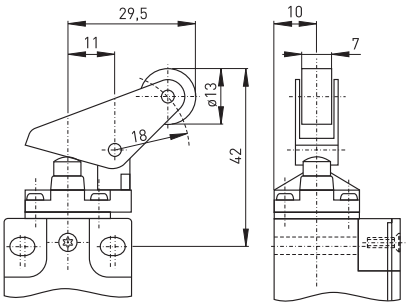

Contact variants: switch travel/contacts

	Slow action
1 NC/1 NO contact	**Ex 95 WPHM 1Ö/1S** 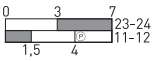
1 NC/1 NO contact with overlapping	**Ex 95 WPHM UE** 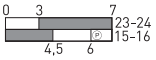
2 NC contacts	**Ex 95 WPHM 2Ö** 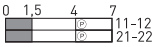

Features/Options
- Lever angle adjustable in 10° steps
- Wear-resistant thermoplastic roller
- Actuator heads can be repositioned in 4 x 90° steps
- Metal roller available on request

// Rocking roller lever D

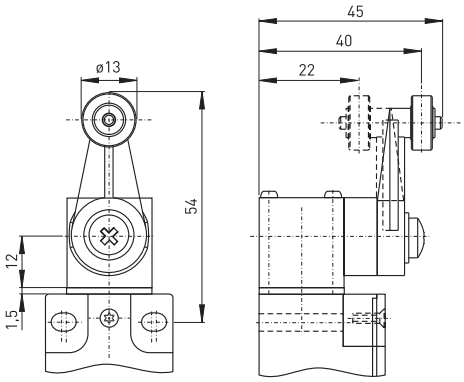

Contact variants: switch travel/contacts

	Slow action
1 NC/1 NO contact	**Ex 95 D 1Ö/1S** 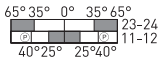
1 NC/1 NO contact with overlapping	**Ex 95 D UE** 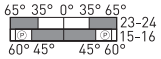
2 NC contacts	**Ex 95 D 2Ö** 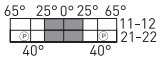

Ex position switches with safety function
// Series Ex T 356

Features/Options
- Ex zone 1 and 21
- Thermoplastic enclosure with metal cover
- Mounting dimensions and switching points to EN 50041
- Pre-wired cable available in various lengths
- Actuator heads can be repositioned in 4 x 90° steps
- Angle of offset roller lever can be adjusted in 10° steps
- Special version only for dust Ex zone 22 available

// EX T 356

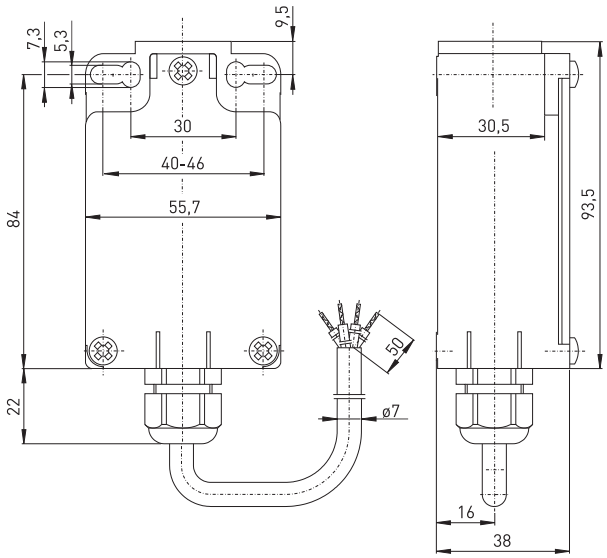

Technical data

Standards	EN 60947-5-1; EN 1088; EN 60079-0, EN 60079-1, EN 60079-31; EN ISO 13849-1
Enclosure	glass-fibre reinforced, shock-proof thermoplastic, self-extinguishing
Cover	steel enamelled
Switch insert	Ex 13
Degree of protection	IP 65 according to EN 60529
Contact material	silver
Switching system	slow action, positive break NC contact ⊖
Switching elements	change-over contact with double break Zb, galvanically separated contact bridges
Connection	cable H05VV-F, 4 x 0.75 mm²
B_{10d} (10 % load)	2 million
T_M	max. 20 years
Cable length	2 oder 5 m
U_{imp}	4 kV
U_i	250 V
I_{the}	T6: 6 A, T5: 3 A
I_e/U_e	6 A/250 VAC; 0.25 A/230 VDC
Utilisation category	AC-15, DC-13
Max. fuse rating	6 A gL/gG D-fuse
Ambient temperature Ta	T6: –20 °C ... +65 °C; T5: –20 °C ... +95 °C
Mechanical life	> 1 million operations
Switching frequency	1800/h
Repeat accuracy	± 0.1 mm
Contact gap	max. 2 x 4.5 mm
Ex marking	Ⓔx II 2G Ex d IIC T6/T5 Gb, II 2D Ex tb IIIC T80°C/T95°C Db IECEx Ex d IIC T6/T5 Gb, Ex tb IIIC T80°C/T95°C Db
Approvals	PTB 03 ATEX 1068 X*, IECEx PTB 06.0053 X

*referring to the switch insert

Type code	Ex T 356 S 1Ö/1S-3D

Equipment Categ. 3D, dust Ex zone 22
Contact type 1Ö/1S
Actuator S (R, 4VH, 4V7H, etc. ...)
Series
Ex certified component

Ex position switches with safety function
// Series Ex T 356, actuator

Features/Options
- Actuator type B to DIN EN 50 041
- Actuating speed 0.5 m/s with an actuating angle of α = 0°

Features/Options
- Actuator type C to DIN EN 50 041
- Actuating speed 0.5 m/s with an actuating angle of α = 30°

// Plunger S

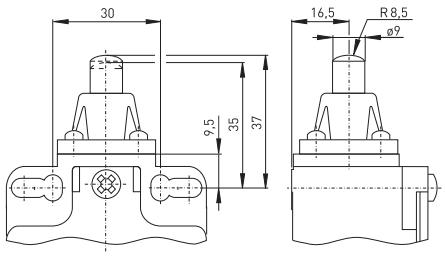

Contact variants: switch travel/contacts

	Slow action
1 NC/1 NO contact	Ex T 356 S 1Ö/1S 0 3,5 6 BK-GY 2 3,3 BN-BU

// Roller plunger R

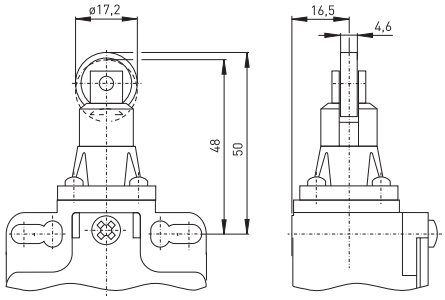

Contact variants: switch travel/contacts

	Slow action
1 NC/1 NO contact	Ex T 356 R 1Ö/1S 0 3,5 6 BK-GY 2 3,3 BN-BU

Ex position switches with safety function
// Series Ex T 356, actuator

Features/Options
- Actuator type A to DIN EN 50 041
- Actuating speed 2.5 m/s with an actuating angle of α = 30°
- Wear-resistant thermoplastic roller
- Actuator heads can be repositioned in 4 x 90° steps

Features/Options
- Actuating speed 2.5 m/s with an actuating angle of α = 30°
- Wear-resistant thermoplastic roller
- Actuator heads can be repositioned in 4 x 90° steps
- For safety duties ⊖, positive break, ordering suffix -2138

Note
Positive break angle Ⓟ only valid for Ex T4V7H 356 1Ö/1S-2138

// Rocking roller lever 4VH

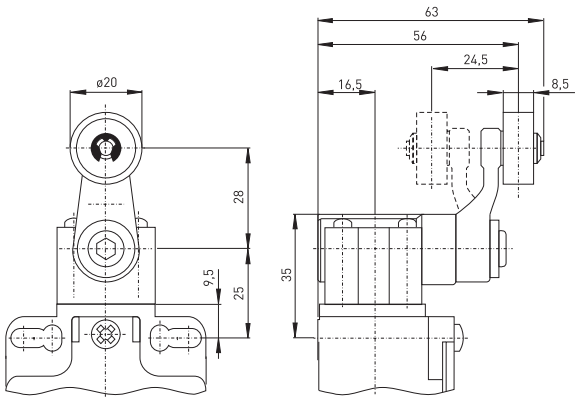

Contact variants: switch travel/contacts

	Slow action
1 NC/1 NO contact	**Ex T 356 4VH 1Ö/1S** 80° 42° 0° 42° 80° BK-GY BN-BU 39° 24° 24° 39°

// Adjustable rocking lever 4V7H-2138

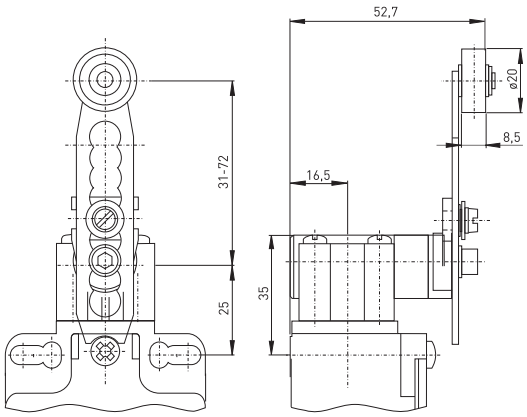

Contact variants: switch travel/contacts

	Slow action
1 NC/1 NO contact	**Ex T 356 4V7H 1Ö/1S-2138** 80° 42° 0° 42° 80° BK-GY BN-BU 39° 24° 24° 39°

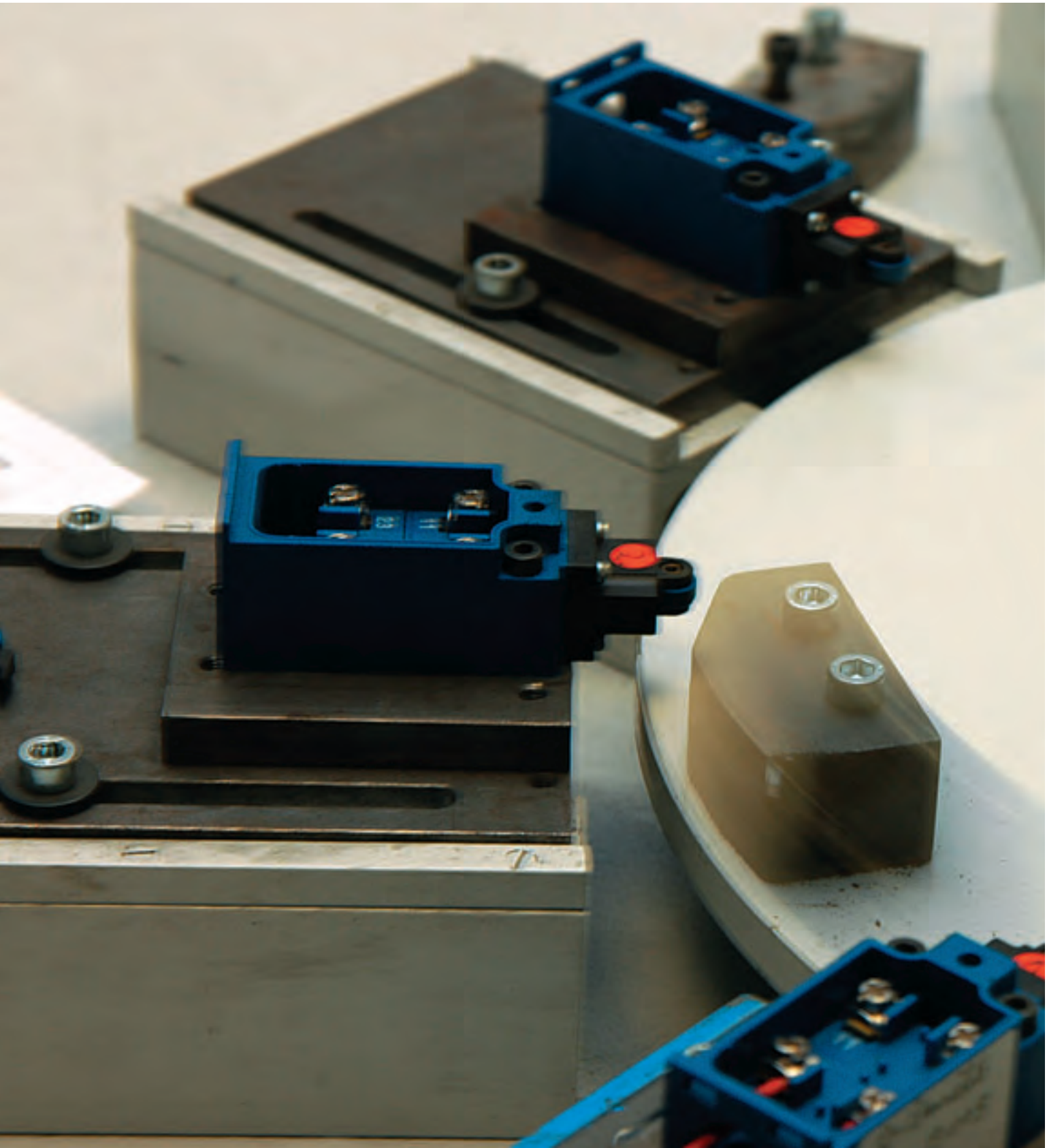

Ex position switches with safety function
// Series Ex 335

Features/Options
- Ex zone 1 and 21
- Design according to DIN EN 50041
- Available with contact overlapping
- Wiring compartment
- Actuator heads can be repositioned in 4 x 90° steps
- Angle of offset roller lever can be adjusted in 10° steps
- Special version only for dust Ex zone 22 available
- With gold-plated contacts available on request

// EX 335

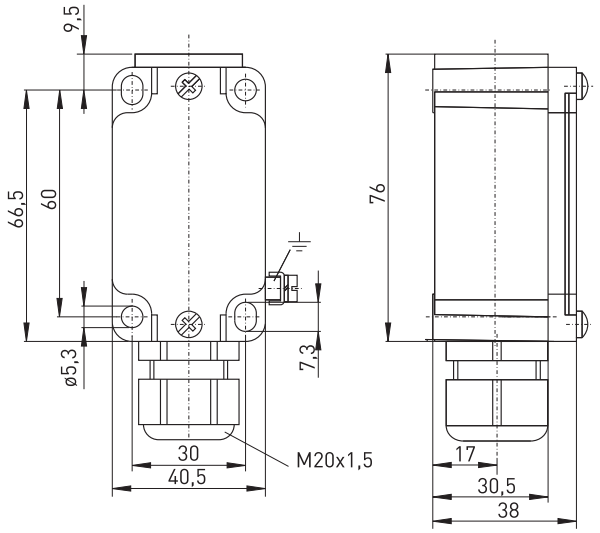

Technical data

Standards	EN 60947-5-1; EN 1088; EN 60079-0, EN 60079-1, EN 60079-7, EN 60079-31; EN ISO 13849-1
Design	DIN EN 50 041
Enclosure	zinc die casting, enamelled
Switch insert	Ex 95
Degree of protection	IP 67 according to EN 60529
Contact material	silver
Switching system	slow action, positive break NC contact ⊖
Switching elements	change-over contact with double break Zb or 2 NC contacts, galvanically separated contact bridges
Connection	M3 screw clamps
Cable section	max. 1.5 mm² (incl. conductor ferrules)
B_{10d} (10 % load)	2 million
T_M	max. 20 years
U_{imp}	4 kV
U_i	250 V
I_{the}	6 A
I_e/U_e	6 A/250 VAC; 0.25 A/230 VDC
Utilisation category	AC-15, DC-13
Max. fuse rating	6 A gL/gG D-fuse
Ambient temperature Ta	–20 °C ... +60 °C
Mechanical life	> 1 million operations
Switching frequency	1800/h
Repeat accuracy	± 0.1 mm
Contact gap	max. 2 x 3.5 mm
Ex marking	Ⓔx II 2G Ex de IIC T6/T5 Gb, II 2D Ex tb IIIC T80°C/T95°C Db IECEx Ex de IIC T6/T5 Gb, Ex tb IIIC T80°C/T95°C Db
Approvals	DMT 01 ATEX E 178, IECEx BVS 07.0014

Type code	Ex 335 S 1Ö/1S-3D

- Equipment Categ. 3D, dust Ex zone 22
- Contact type 1Ö/1S, (2Ö, UE)
- Actuator S (R, 4VH, 4V7H-2138, etc.)
- Series
- Ex certified component

Ex position switches with safety function
// Series Ex 335, actuator

Features/Options
- Actuator type B to DIN EN 50 041
- Actuating speed 0.5 m/s with an actuating angle of α = 0°

Features/Options
- Actuator type C to DIN EN 50 041
- Actuating speed 0.5 m/s with an actuating angle of α = 30°

// Plunger S

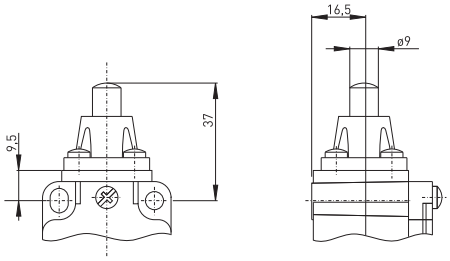

// Roller plunger R

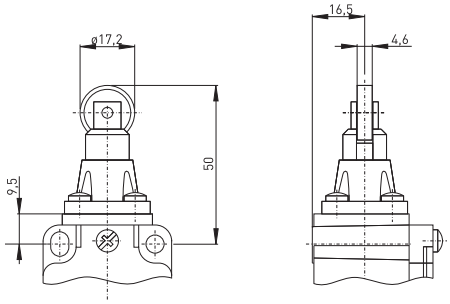

Contact variants: switch travel/contacts

	Slow action
1 NC/1 NO contact	Ex 335 S 1Ö/1S 
1 NC/1 NO contact with overlapping	Ex 335 S UE 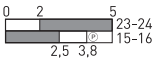
2 NC contacts	Ex 335 S 2Ö 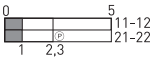

Contact variants: switch travel/contacts

	Slow action
1 NC/1 NO contact	Ex 335 R 1Ö/1S 
1 NC/1 NO contact with overlapping	Ex 335 R UE 
2 NC contacts	Ex 335 R 2Ö 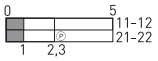

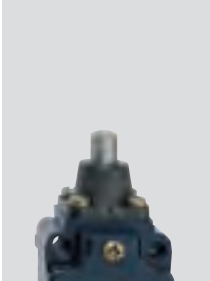

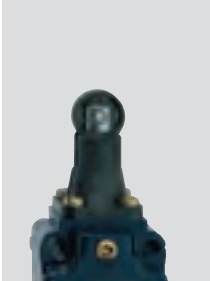

Ex position switches with safety function
// Series Ex 335, actuator

Features/Options
- Actuating speed 0.5 m/s with an actuating angle of α = 30°
- Actuation parallel to switch from right
- Wear-resistant thermoplastic roller
- Actuator heads can be repositioned in 4 x 90° steps

Note
Actuation from the left should be avoided since this reduces the mechanical life of the position switch.

Features/Options
- Actuating speed 0.5 m/s with an actuating angle of α = 30°
- Actuation parallel to switch from below
- Wear-resistant thermoplastic roller
- Actuator heads can be repositioned in 4 x 90° steps

// Roller lever 1K

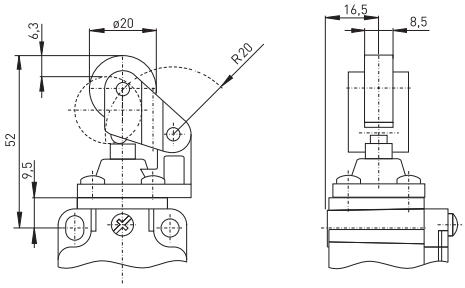

Contact variants: switch travel/contacts

	Slow action
1 NC/1 NO contact	Ex 335 1K 1Ö/1S 
1 NC/1 NO contact with overlapping	Ex 335 1K UE 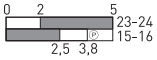
2 NC contacts	Ex 335 1K 2Ö 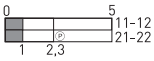

// Angled roller lever 3K

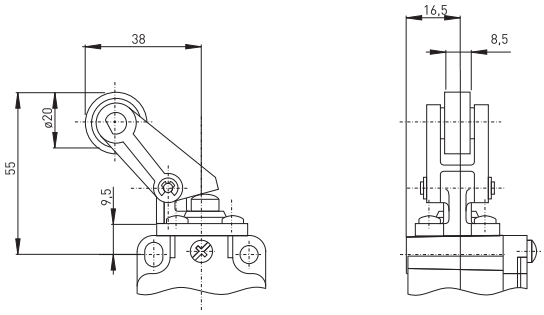

Contact variants: switch travel/contacts

	Slow action
1 NC/1 NO contact	Ex 335 3K 1Ö/1S 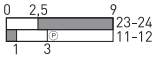
1 NC/1 NO contact with overlapping	Ex 335 3K UE 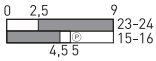
2 NC contacts	Ex 335 3K 2Ö 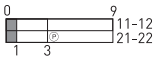

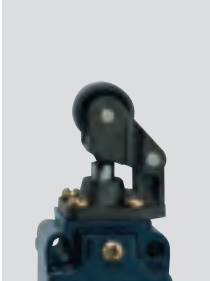

Features/Options
- Actuator type A to DIN EN 50 041
- Actuating speed 2.5 m/s with an actuating angle of α = 30°
- Wear-resistant thermoplastic roller
- Actuator heads can be repositioned in 4 x 90° steps

// Rocking roller lever 4VH

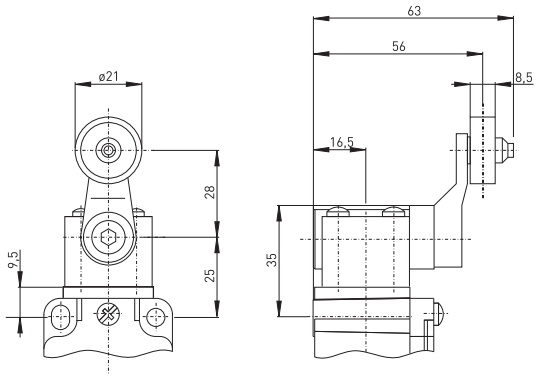

Contact variants: switch travel/contacts

	Slow action
1 NC/1 NO contact	**Ex 335 4VH 1Ö/1S** 85° 25°0°25° 85° 23-24 11-12 30°15°15°30°
1 NC/1 NO contact with overlapping	**Ex 335 4VH UE** 85° 20°0°20° 85° 23-24 15-16 40°25°25°40°
2 NC contacts	**Ex 335 4VH 2Ö** 85° 30° 0° 30° 85° 11-12 21-22 15°15°

Features/Options
- Actuating speed 2.5 m/s with an actuating angle of α = 30°
- Wear-resistant thermoplastic roller
- Actuator heads can be repositioned in 4 x 90° steps

// Long rocking roller lever 4V3H

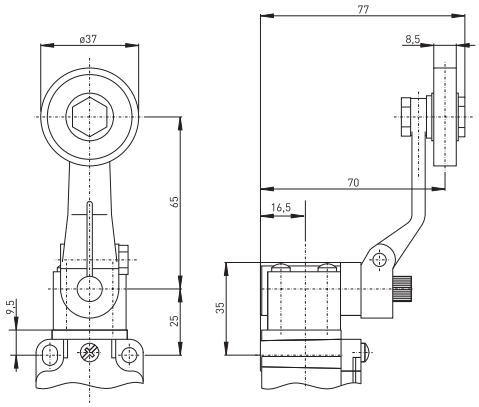

Contact variants: switch travel/contacts

	Slow action
1 NC/1 NO contact	**Ex 335 4V3H 1Ö/1S** 85° 25°0°25° 85° 23-24 11-12 30°15°15°30°
1 NC/1 NO contact with overlapping	**Ex 335 4V3H UE** 85° 20°0°20° 85° 23-24 15-16 40°25°25°40°
2 NC contacts	**Ex 335 4V3H 2Ö** 85° 30° 0° 30° 85° 11-12 21-22 15°15°

Ex position switches with safety function
// Series Ex 335, actuator

Features/Options
- Actuating speed 2.5 m/s with an actuating angle of α = 30°
- Wear-resistant thermoplastic roller
- Actuator heads can be repositioned in 4 x 90° steps
- For safety duties ⊖, positive break, ordering suffix -2138

Note
Positive break angle Ⓟ only valid for Ex T4V7H 356 1Ö/1S-2138

// Adjustable rocking lever 4V7H-2138

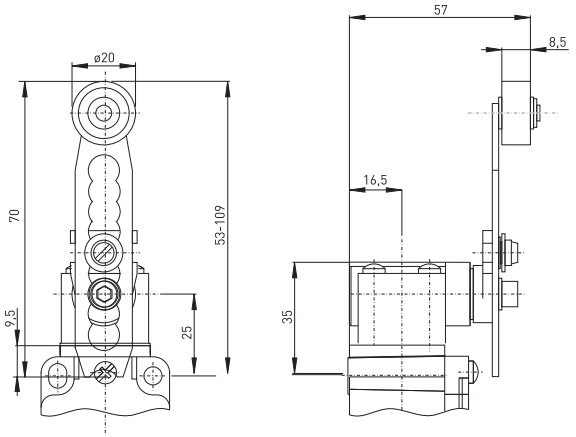

Contact variants: switch travel/contacts

	Slow action
1 NC/1 NO contact	**Ex 335 4V7H 1Ö/1S**-2138 85° 25°0°25° 85° 23-24 11-12 30°15°15°30°
1 NC/1 NO contact with overlapping	**Ex 335 4V7H UE**-2138 85° 20°0°20° 85° 23-24 15-16 40°25°25°40°
2 NC contacts	**Ex 335 4V7H 2Ö**-2138 85° 30° 0° 30° 85° 11-12 21-22 15°15°

LIFE TEST OF ACTUATOR

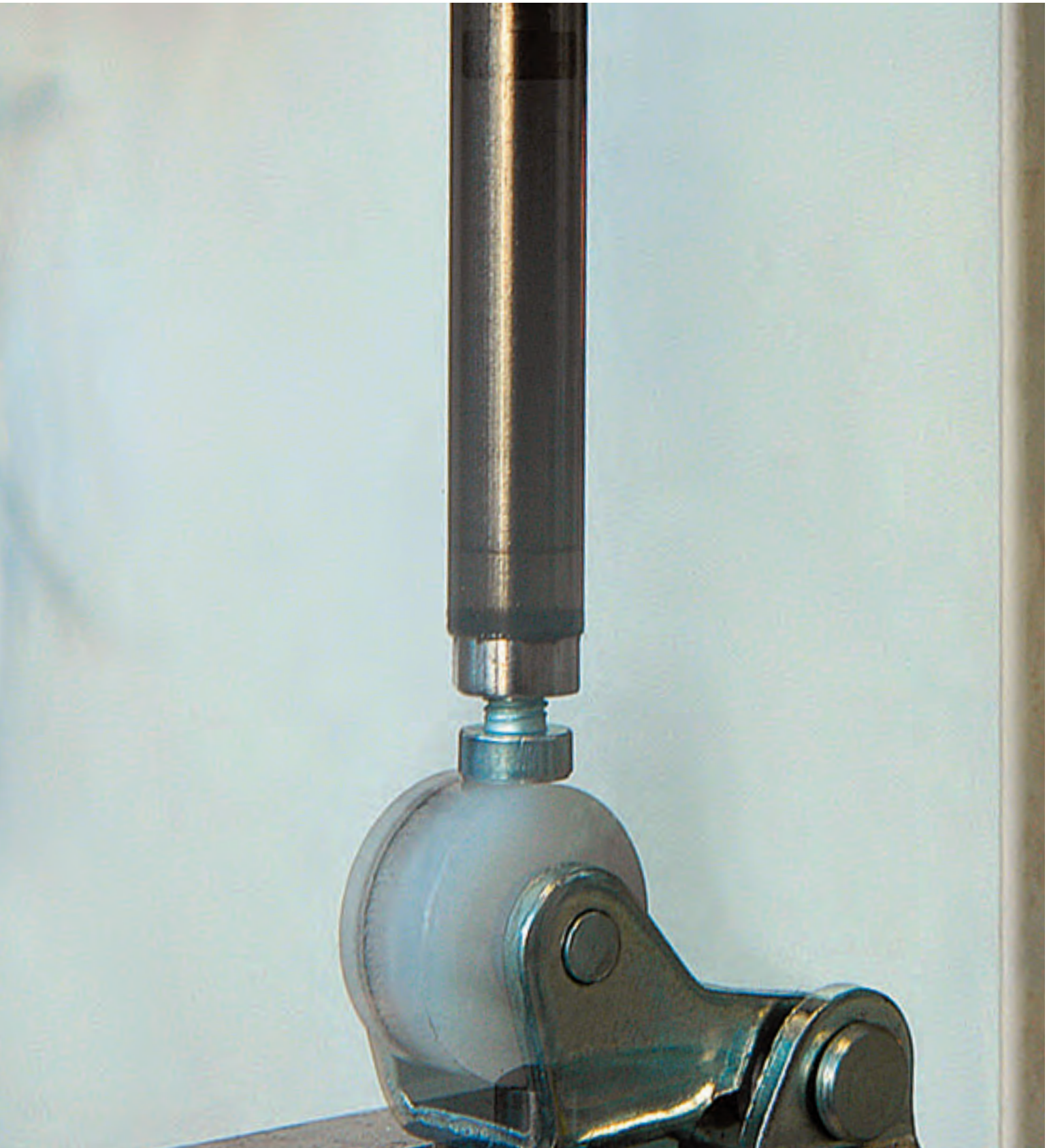

Ex position switches with safety function
// Series Ex 355

Features/Options
- Ex zone 1 and 21
- Available with contact overlapping
- 3 cable entries
- Actuating elements can be repositioned by 4 x 90°
- Rocking lever can be positioned in 10° steps
- Special version only for dust Ex zone 22 available
- With gold-plated contacts available on request

// EX 355

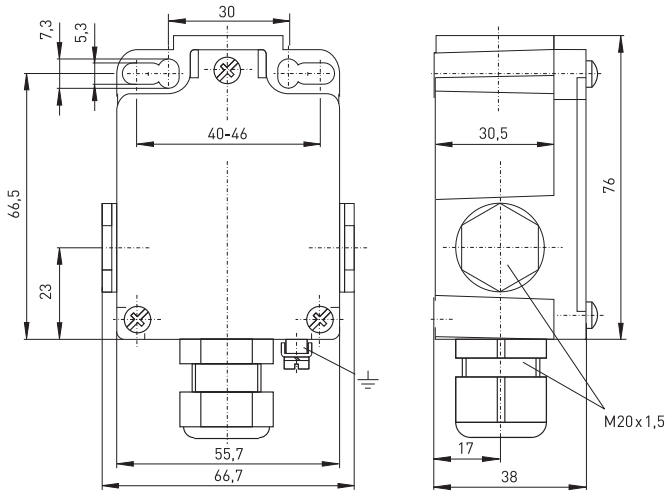

Technical data

Standards	EN 60947-5-1; EN 1088; EN 60079-0, EN 60079-1, EN 60079-7, EN 60079-31; EN ISO 13849-1
Design	mounting dimensions and switching points to DIN EN 50 041
Enclosure	zinc die casting, enamelled
Switch insert	Ex 95
Degree of protection	IP 67 according to EN 60529
Contact material	silver
Switching system	slow action, positive break NC contact ⊖
Switching elements	change-over contact with double break Zb or 2 NC contacts, galvanically separated contact bridges
Connection	M3 screw clamps
Cable section	max. 1.5 mm² (incl. conductor ferrules)
B_{10d} (10 % load)	2 million
T_M	max. 20 years
U_{imp}	4 kV
U_i	250 V
I_{the}	6 A
I_e/U_e	6 A/250 VAC; 0.25 A/230 VDC
Utilisation category	AC-15, DC-13
Max. fuse rating	6 A gL/gG D-fuse
Ambient temperature Ta	–20 °C ... +60 °C
Mechanical life	> 1 million operations
Switching frequency	1800/h
Repeat accuracy	± 0.1 mm
Contact gap	max. 2 x 3.5 mm
Ex marking	Ⓔx II 2G Ex de IIC T6/T5 Gb, II 2D Ex tb IIIC T80°C/T95°C Db IECEx Ex de IIC T6/T5 Gb, Ex tb IIIC T80°C/T95°C Db
Approvals	BVS 04 ATEX E 126, IECEx BVS 07.0013

Type code	Ex 355 S 1Ö/1S-3D

- 3D: Equipment Categ. 3D, dust Ex zone 22
- 1Ö/1S: Contact type 1Ö/1S, (2Ö, UE)
- S: Actuator S (R, 4VH, 4V7H-2138, etc.)
- 355: Series
- Ex: Ex certified component

Ex position switches with safety function
// Series Ex 355, actuator

Features/Options
- Actuator type B to DIN EN 50 041
- Actuating speed 0.5 m/s with an actuating angle of α = 0°

Features/Options
- Actuator type C to DIN EN 50 041
- Actuating speed 0.5 m/s with an actuating angle of α = 30°

// Plunger S

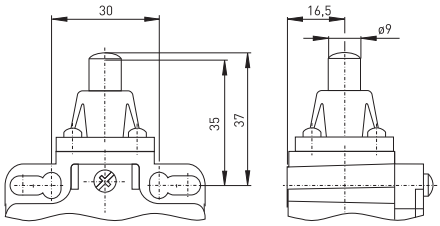

Contact variants: switch travel/contacts

	Slow action
1 NC/1 NO contact	Ex 355 S 1Ö/1S 
1 NC/1 NO contact with overlapping	Ex 355 S UE 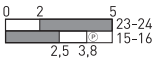
2 NC contacts	Ex 355 S 2Ö 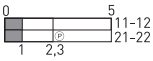

// Roller plunger R

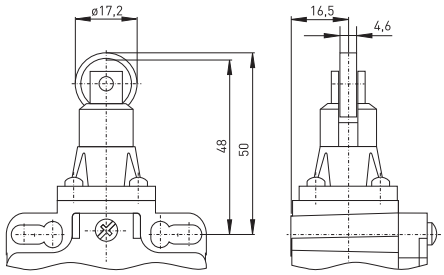

Contact variants: switch travel/contacts

	Slow action
1 NC/1 NO contact	Ex 355 R 1Ö/1S 
1 NC/1 NO contact with overlapping	Ex 355 R UE 
2 NC contacts	Ex 355 R 2Ö 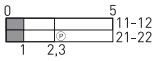

Ex position switches with safety function
// Series Ex 355, actuator

Features/Options
- Actuating speed 0.5 m/s with an actuating angle of α = 30°
- Actuation parallel to switch from right
- Wear-resistant thermoplastic roller
- Actuator heads can be repositioned in 4 x 90° steps

Note
Actuation from the left should be avoided since this reduces the mechanical life of the position switch.

Features/Options
- Actuating speed 0.5 m/s with an actuating angle of α = 30°
- Actuation parallel to switch from below
- Wear-resistant thermoplastic roller
- Actuator heads can be repositioned in 4 x 90° steps

// Roller lever 1K

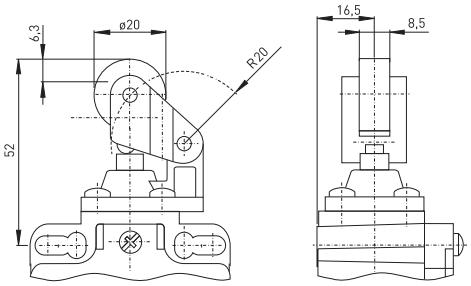

Contact variants: switch travel/contacts

	Slow action
1 NC/1 NO contact	Ex 355 1K 1Ö/1S 
1 NC/1 NO contact with overlapping	Ex 355 1K UE 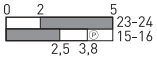
2 NC contacts	Ex 355 1K 2Ö 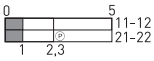

// Angled roller lever 3K

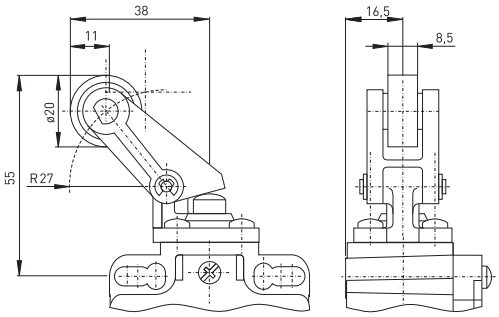

Contact variants: switch travel/contacts

	Slow action
1 NC/1 NO contact	Ex 355 3K 1Ö/1S 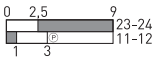
1 NC/1 NO contact with overlapping	Ex 355 3K UE 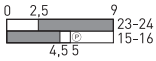
2 NC contacts	Ex 355 3K 2Ö 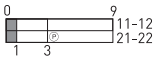

Features/Options
- Actuator type A to DIN EN 50 041
- Actuating speed 2.5 m/s with an actuating angle of α = 30°
- Wear-resistant thermoplastic roller
- Actuator heads can be repositioned in 4 x 90° steps

// Rocking roller lever 4VH

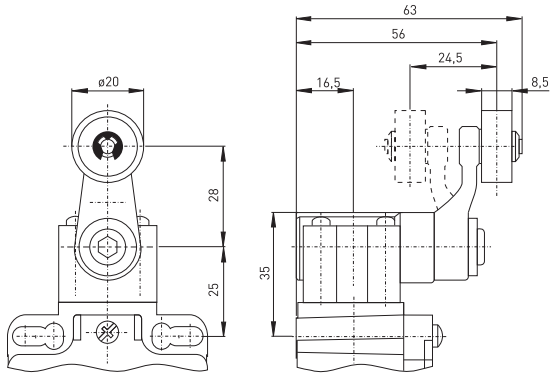

Contact variants: switch travel/contacts

	Slow action
1 NC/1 NO contact	**Ex 355 4VH 1Ö/1S** 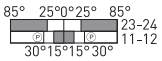
1 NC/1 NO contact with overlapping	**Ex 355 4VH UE** 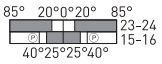
2 NC contacts	**Ex 355 4VH 2Ö** 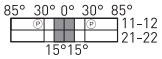

Features/Options
- Actuating speed 2.5 m/s with an actuating angle of α = 30°
- Wear-resistant thermoplastic roller
- Actuator heads can be repositioned in 4 x 90° steps

// Long rocking roller lever 4V3H

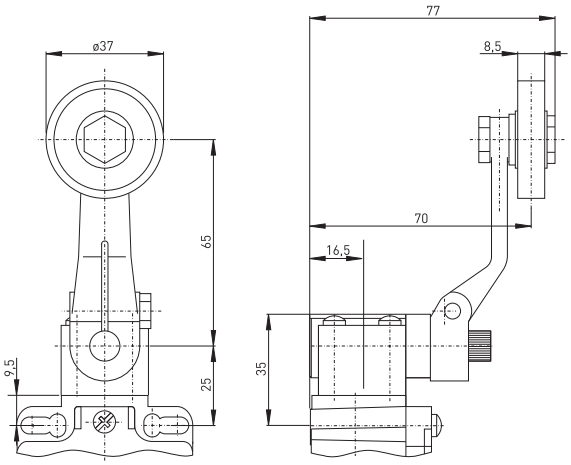

Contact variants: switch travel/contacts

	Slow action
1 NC/1 NO contact	**Ex 355 4V3H 1Ö/1S** 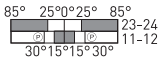
1 NC/1 NO contact with overlapping	**Ex 355 4V3H UE** 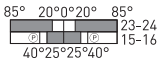
2 NC contacts	**Ex 355 4V3H 2Ö** 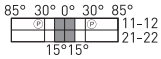

Ex position switches with safety function
// Series Ex 355, actuator

Features/Options
- Actuating speed 2.5 m/s with an actuating angle of α = 30°
- Wear-resistant thermoplastic roller
- Actuator heads can be repositioned in 4 x 90° steps
- For safety duties ⊖, positive break, ordering suffix -2138

Note
Positive break angle Ⓟ only valid for Ex T4V7H 356 1Ö/1S-2138

// Adjustable rocking lever 4V7H-2138

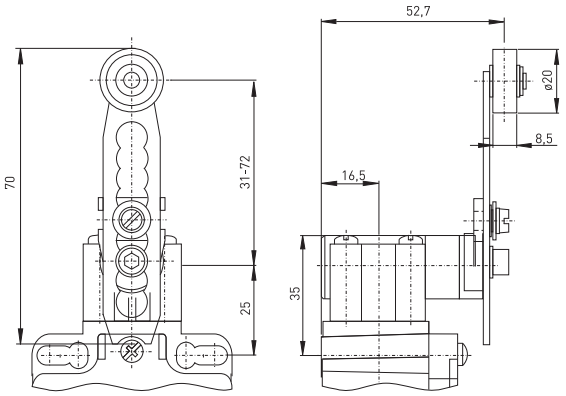

Contact variants: switch travel/contacts

	Slow action
1 NC/1 NO contact	**Ex 355 4V7H 1Ö/1S**-2138 85° 25°0°25° 85° 23-24 11-12 30°15°15°30°
1 NC/1 NO contact with overlapping	**Ex 355 4V7H UE**-2138 85° 20°0°20° 85° 23-24 15-16 40°25°25°40°
2 NC contacts	**Ex 355 4V7H 2Ö**-2138 85° 30° 0° 30° 85° 11-12 21-22 15°15°

Ex position switches with safety function
// Series Ex 61

Features/Options
- Ex zone 1 and 21
- Metal enclosure
- Pre-wired cable available in various lengths
- Available with actuator heads repositioned by 4 x 90°
- Special version only for dust Ex zone 22 available

// EX 61

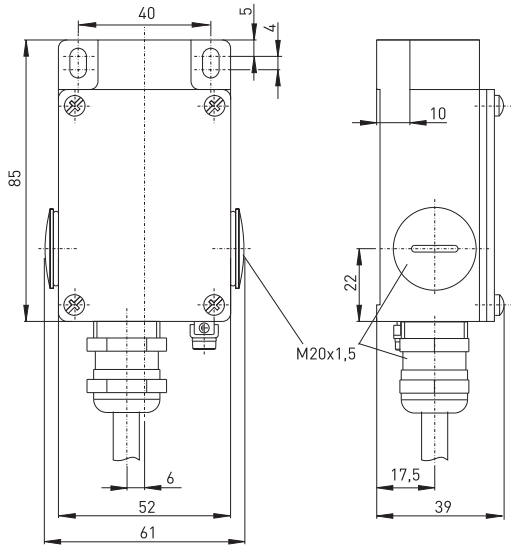

Technical data

Standards	EN 60947-5-1; EN 1088; EN 60079-0, EN 60079-1, EN 60079-31; EN ISO 13849-1
Enclosure	aluminium die casting, enamelled
Cover	steel, enamelled
Switch insert	Ex 14
Degree of protection	IP 65 according to EN 60529
Contact material	silver
Switching system	slow action, positive break NC contact ⊖
Switching elements	change-over contact with double break Zb or 2 NC contacts, galvanically separated contact bridges
Connection	cable H05VV-F
Cable section	4 x 0.75 mm²
Cable length	3 m
B_{10d} (10 % load)	2 million
T_M	max. 20 years
U_{imp}	4 kV
U_i	250 V
I_{the}	T6: 6 A, T5: 3 A
I_e/U_e	6 A/250 VAC; 0.25 A/230 VDC
Utilisation category	AC-15, DC-13
Max. fuse rating	6 A gL/gG D-fuse
Ambient temperature Ta	T6: –20 °C ... +65 °C, T5: –20 °C ... +95 °C
Mechanical life	> 1 million operations
Switching frequency	1800/h
Repeat accuracy	± 0.1 mm
Contact gap	max. 2 x 4.5 mm
Ex marking	Ⓔx II 2G Ex d IIC T6/T5 Gb, II 2D Ex tb IIIC T80°C/T95°C Db IECEx Ex d IIC T6/T5 Gb, Ex tb IIIC T80°C/T95°C Db
Approvals	PTB 03 ATEX 1070 X*, IECEx PTB 06.0098X* *referring to the switch insert

Type code	Ex 61 W 1Ö/1S

Contact type 1Ö/1S
Actuator W (WH, WHL, WPH, etc. ...)
Series
Ex certified component

Ex position switches with safety function
// Series Ex 61, actuator

Features/Options
- Actuating speed 0.5 m/s with an actuating angle of 15°
- Exact repeatability of switching point
- Collar to protect against the entry of foreign bodies

Features/Options
- Actuating speed 0.5 m/s with an actuating angle of α = 40° and β = 25°
- Wear-resistant thermoplastic roller
- Available with actuator repositioned by 4 x 90°
- Collar to protect against the entry of foreign bodies
- With metal roller available on request

Note
Actuation from the left should be avoided since this reduces the mechanical life of the position switch.

// Plunger W

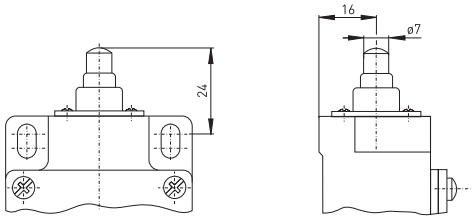

Contact variants: switch travel/contacts

	Slow action
1 NC/1 NO contact	Ex 61 W 1Ö/1S 0 3,5 5,5 BK-GY 2 BN-BU

// Roller lever with collar WH

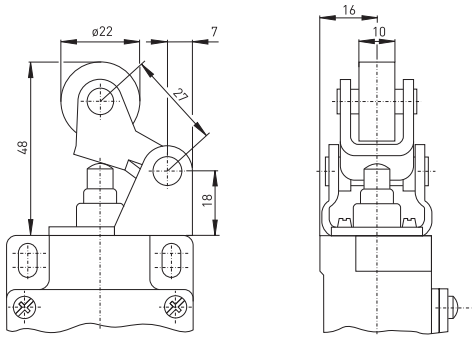

Contact variants: switch travel/contacts

	Slow action
1 NC/1 NO contact	Ex 61 WH 1Ö/1S 0 3,5 5,5 BK-GY 2 BN-BU

Ex position switches with safety function
// Series Ex 61, actuator

Features/Options
- Actuating speed 0.5 m/s with an actuating angle of α = 30°
- Wear-resistant thermoplastic roller
- Available with actuator repositioned by 4 x 90°
- Collar to protect against the entry of foreign bodies
- With metal roller available on request

Note
Actuation from the left should be avoided since this reduces the mechanical life of the position switch.

Features/Options
- Actuating speed 0.5 m/s with an actuating angle of α = 30°
- Actuation parallel to switch from below
- Wear-resistant thermoplastic roller
- Available with actuator repositioned by 4 x 90°
- Collar to protect against the entry of foreign bodies
- With metal roller available on request

// Long roller lever with collar WHL

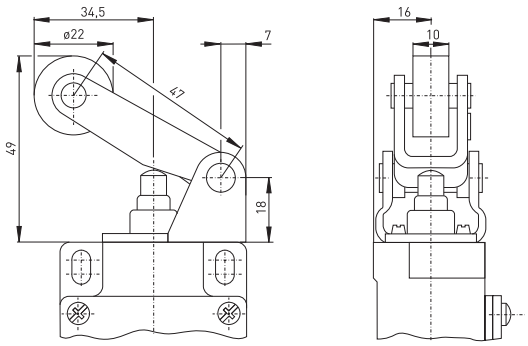

Contact variants: switch travel/contacts

	Slow action
1 NC/1 NO contact	Ex 61 WHL 1Ö/1S 0 7 11,5 BK-GY 3,5 BN-BU

// Parallel roller lever with collar WPH

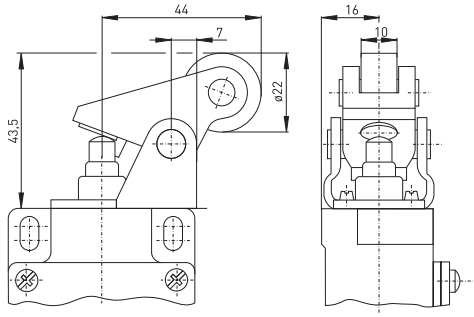

Contact variants: switch travel/contacts

	Slow action
1 NC/1 NO contact	Ex 61 WPH 1Ö/1S 0 3 5 BK-GY 1,5 BN-BU

MOUNTING OF GROUND SCREW

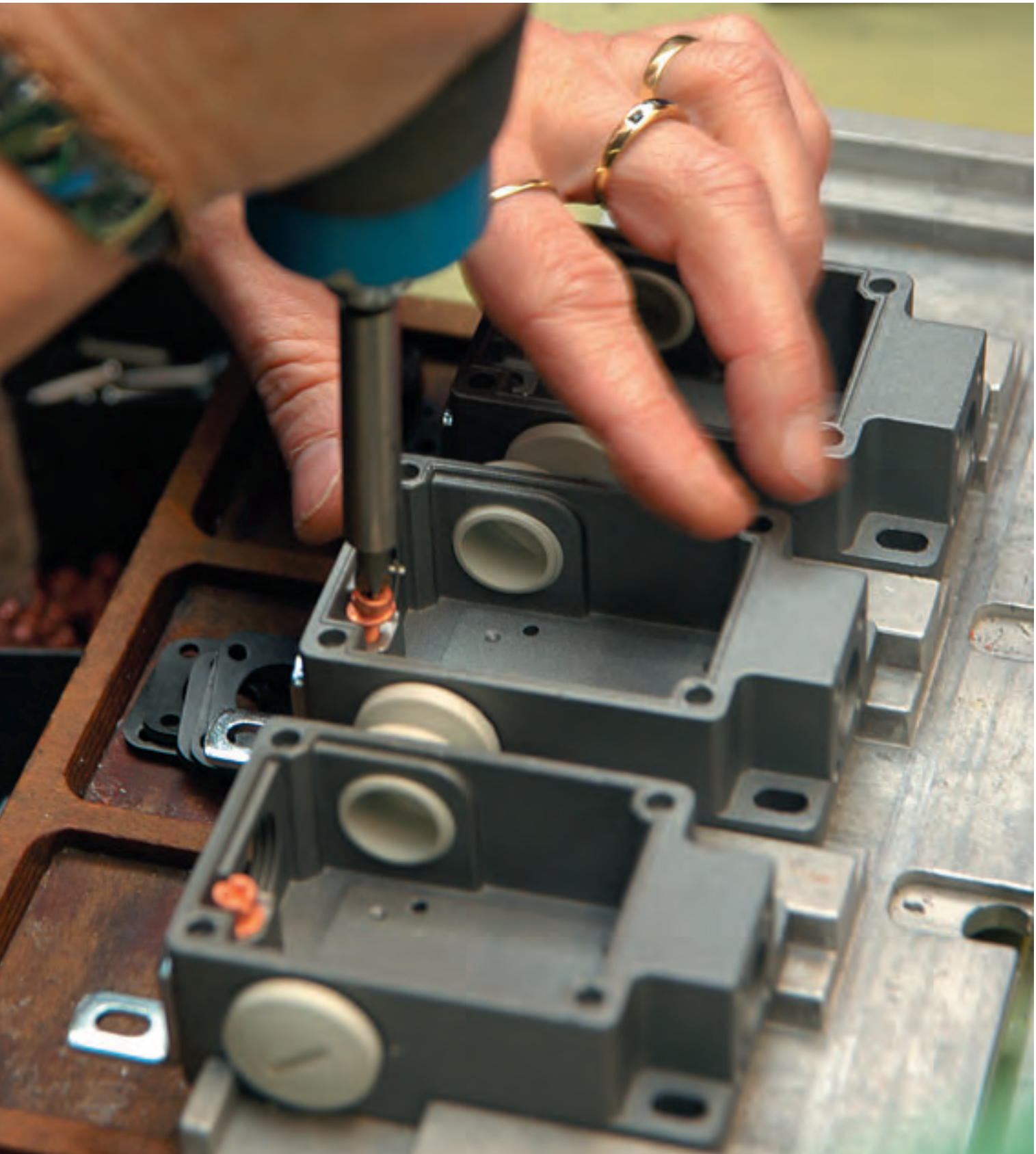

Ex 13 SB

Ex safety switches for hinged guards

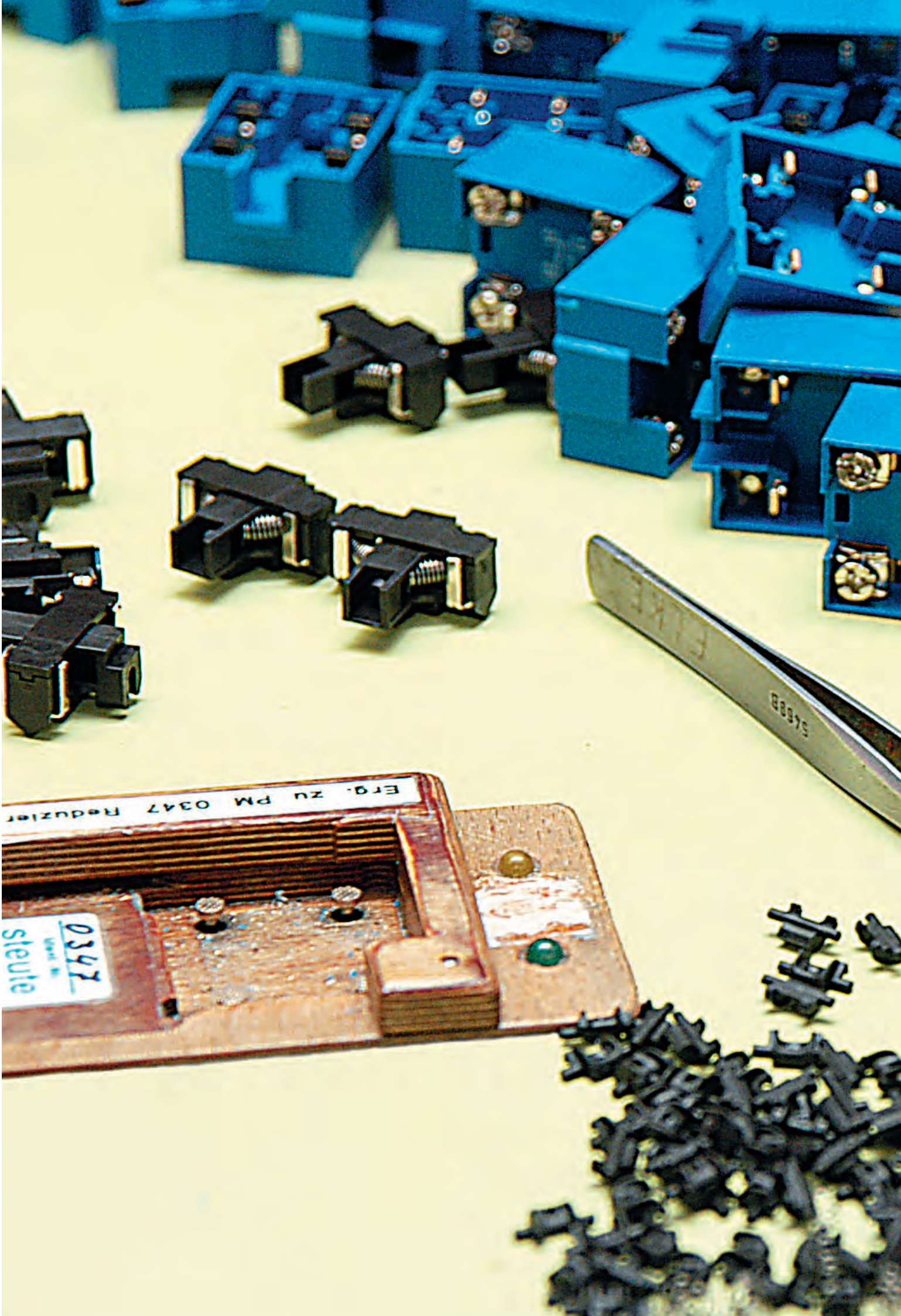
Erg. zu PM 0347 Reduzier
0347
steute

Ex safety switches for hinged guards

Range of application

These Ex safety switches are suitable for hinged safety guards, which need to be closed in order to guarantee the necessary operational safety.

The variety of requirements to be found in practice can be met by means of the wide range of safety switches for hinged guard doors.

Depending on the particular version of the switch, small doors and service flaps, as well as heavy hinged doors on machinery and plants, can be protected in such a way as to provide for easy set-up and maintenance.

Design and operating principle

A general advantage of the Ex safety switches shown here is the integral cam within the safety switch. The requirements of EN 1088, such as positive linkage between cam and actuator, as well as protection against tampering, are thus fulfilled.

This combination within the switch provides a cost advantage for the user in avoiding the necessity of mounting a specially designed cam. These safety switches are provided with slow action.

All Ex safety switches for hinged guards shown in this chapter bear the CE mark according to the Machinery Directive 2006/42/EC and according to ATEX 94/9/EC. The Ex safety switches for hinged guards per equipment category 3D bear the CE mark without the number of the notified body and have received a CE declaration of manufacturer conformity.

Application

safety flap switch on sliding guard

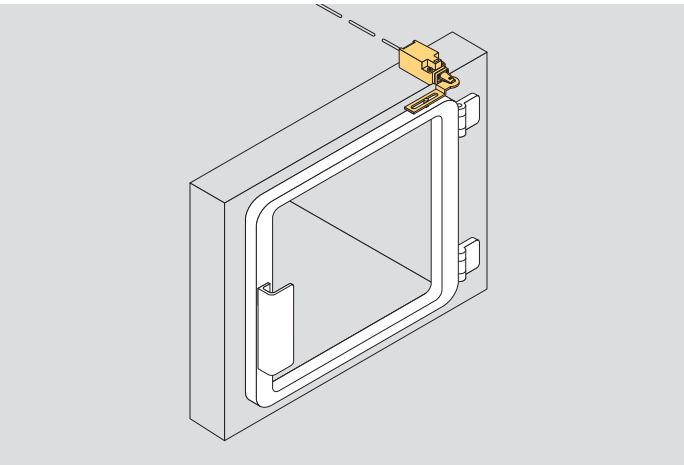

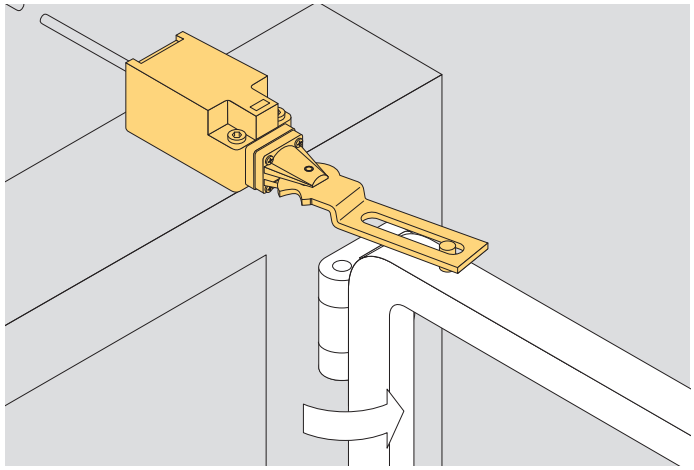

safety hinge switch on sliding guard

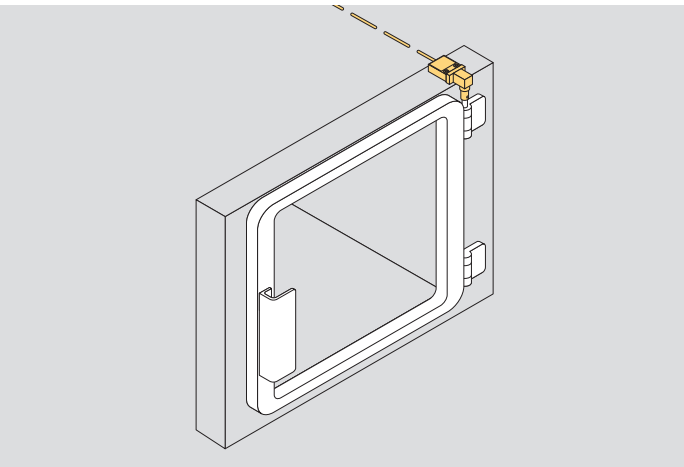

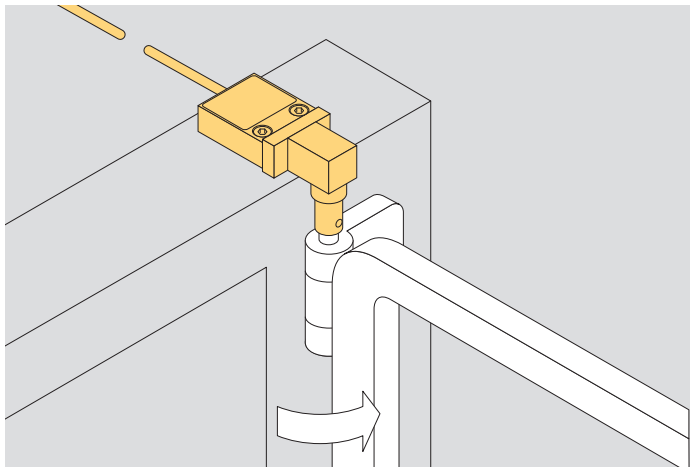

Ex safety switches for hinged guards
// Series Ex 95 T.C

Features/Options
- Ex zone 1 and 21
- Double insulated ⧈
- Slow action ⊖, change-over contact with double break
- Cable entry M20 x 1.5
- Wiring compartment
- With gold-plated contacts available on request
- Mounting details to EN 50 047
- Actuator head can be repositioned in factory in 4 x 90° steps
- Special version only for dust Ex zone 22 available

// EX 95 T.C

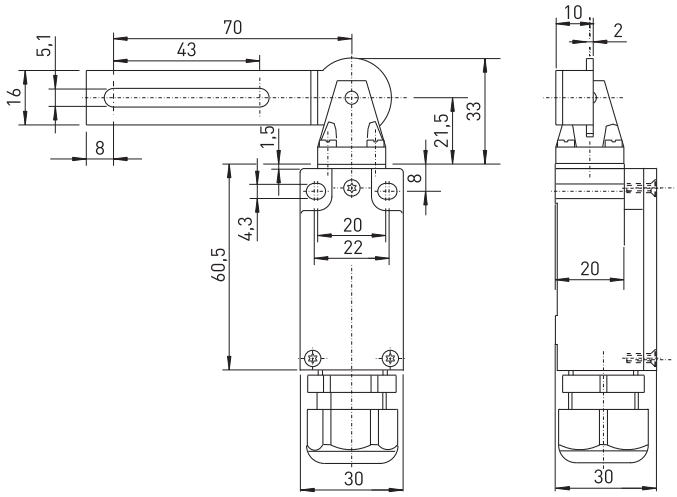

Technical data

Standards	EN 60947-5-1; EN 1088; EN 60079-0, EN 60079-1, EN 60079-7; EN 61241-0, EN 61241-1; EN ISO 13849-1
Design	mounting details to DIN EN 50 047
Enclosure	glass-fibre reinforced, shock-proof thermoplastic, self-extinguishing UL 94-V0
Degree of protection	IP 67 according to EN 60529
Contact material	silver
Switching system	slow action, positive break NC contact ⊖
Switching elements	change-over contact with double break Zb or 2 NC contacts, galvanically separated contact bridges
Connection	M3 screw clamps
Cable section	max. 1.5 mm² (incl. conductor ferrules)
Cable entry	M20 x 1.5
B_{10d} (10 % load)	2 million
T_M	max. 20 years
U_{imp}	4 kV
U_i	250 V
I_{the}	6 A
I_e/U_e	6 A/250 VAC; 0.25 A/230 VDC
Utilisation category	AC-15, DC-13
Max. fuse rating	6 A gL/gG D-fuse
Ambient temperat. Ta	–20 °C ... +60 °C
Mechanical life	> 1 million operations
Ex marking	Ⓔx II 2G Ex de IIC T6, II 2D Ex tD A21 IP67 T80°C
Approvals	DMT 01 ATEX E 118; IECEx in 2011

Contact variants: switch travel/contacts

	Slow action
1 NC/1 NO contact	**Ex 95 T5C 1Ö/1S** 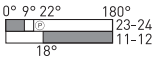
1 NC/1 NO contact with overlapping	**Ex 95 T5C UE** 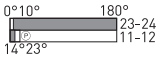
2 NC contacts	**Ex 95 T5C 2Ö** 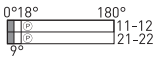

Type code Ex 95 T5C 1Ö/1S-3D

- Equipment Categ. 3D, dust Ex zone 22
- Contact type 1Ö/1S, (2Ö, UE)
- Actuator T5C, 5 Ride-side version (3 Left-side, 4 Swivel doors)
- Series
- Ex certified component

Ex safety switches for hinged guards
// Series Ex 13 SB

Features/Options
- Ex zone 1 and 21
- Double insulated ⧈
- Version with cable entry on side available
- With pre-wired cable, cable length 1 metre
- With gold-plated contacts available on request
- Shaft bore ø 10 mm available
- Actuating shaft can be turned 360°
- Special version only for dust Ex zone 22 available

// EX 13 SB

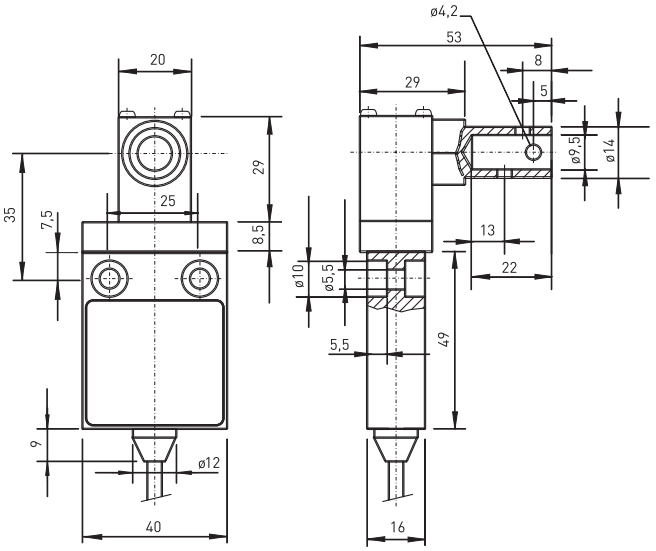

Technical data

Standards	EN 60947-5-1; EN 1088; BG-GS-ET-15; EN 60079-0, EN 60079-1; EN 60079-31; EN ISO 13849-1
Enclosure	glass-fibre reinforced, shock-proof thermoplastic, self-extinguishing UL 94-V0
Degree of protection	IP 65 according to EN 60529
Contact material	silver
Switching system	slow action, positive break NC contact ⊖
Switching elements	change-over contact with double break Zb or 2 NC contacts, galvanically separated contact bridges
Connection	cable H05VV-F, 4 x 0.75 mm²
Cable length	1 m
B_{10d} (10 % load)	2 million
T_M	max. 20 years
U_{imp}	4 kV
U_i	250 V
I_{the}	T6: 6 A, T5: 3 A
I_e/U_e	6 A/250 VAC; 0.25 A/230 VDC
Utilisation category	AC-15, DC-13
Max. fuse rating	6 A gL/gG D-fuse
Ambient temperat. Ta	T6: –20 °C ... +65 °C, T5: –20 °C ... +95 °C
Mechanical life	> 1 million operations
Ex marking	Ⓔx II 2G Ex d IIC T6/T5 Gb, II 2D Ex tb IIIC T80°C/T95°C Db IECEx Ex d IIC T6/T5 Gb, Ex tb IIIC T80°C/T95°C Db
Approvals	PTB 03 ATEX 1068 X, IECEx PTB 06.0053X

Contact variants: switch travel/contacts

	Slow action
1 NC/1 NO contact	Ex 13 SB 1Ö/1S 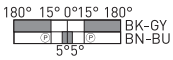

Type code Ex 13 SB 1Ö/1S-S-1m-3D

- Equipment Categ. 3D, dust Ex zone 22
- Cable length 1 m, (2 m, 5 m, 10 m)
- Cable outlet on side
- Contact type 1Ö/1S
- Actuator SB
- Series
- Ex certified component

Ex safety switches for hinged guards
// Series Ex 95 SB

Features/Options
- Ex zone 1 and 21
- Double insulated ⧈
- Slow action ⊖, change-over contact with double break
- With gold-plated contacts available on request
- Mounting details to EN 50 047
- Actuator head can be repositioned in factory in 4 x 90° steps
- Shaft bore ø 10 mm available
- Actuating shaft can be turned 360°
- Special version only for dust Ex zone 22 available

// EX 95 SB

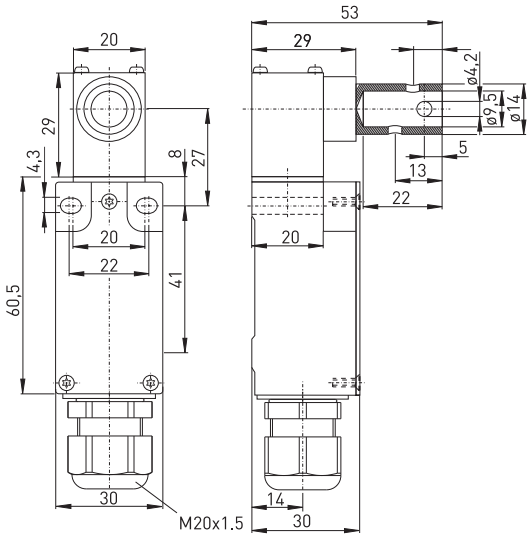

Technical data

Standards	EN 60947-5-1; EN 1088; BG-GS-ET-15; EN 60079-0, EN 60079-1, EN 60079-7; EN 61241-0, EN 61241-1; EN ISO 13849-1
Design	mounting details to DIN EN 50 047
Enclosure	glass-fibre reinforced, shock-proof thermoplastic, self-extinguishing UL 94-V0
Degree of protection	IP 67 according to EN 60529
Contact material	silver
Switching system	slow action, positive break NC contact ⊖
Switching elements	change-over contact with double break Zb or 2 NC contacts, galvanically separated contact bridges
Connection	M3 screw clamps
Cable section	max. 1.5 mm² (incl. conductor ferrules)
Cable entry	M20 x 1.5
B_{10d} (10 % load)	2 million
T_M	max. 20 years
U_{imp}	4 kV
U_i	250 V
I_{the}	6 A
I_e/U_e	6 A/250 VAC; 0.25 A/230 VDC
Utilisation category	AC-15, DC-13
Max. fuse rating	6 A gL/gG D-fuse
Ambient temperat. Ta	–20 °C ... +60 °C
Mechanical life	> 1 million operations
Ex marking	Ⓔx II 2G Ex de IIC T6, II 2D Ex tD A21 IP67 T80°C
Approvals	DMT 01 ATEX E 118; IECEx in 2011

Contact variants: switch travel/contacts

	Slow action
1 NC/1 NO contact	Ex 95 SB 1Ö/1S 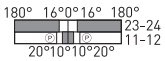
2 NC contacts	Ex 95 SB 2Ö 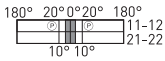
1 NC/1 NO contact with overlapping	Ex 95 SB UE 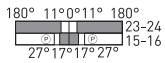

Type code

Ex 95 SB 1Ö/1S-3D

- Equipment Categ. 3D, dust Ex zone 22
- Contact type 1Ö/1S, (2Ö, UE)
- Actuator SB
- Series
- Ex certified component

Ex safety switches for hinged guards
// Series Ex 335 V.S

Features/Options
- Ex zone 1 and 21
- Wiring compartment
- With gold-plated contacts available on request
- Mounting details to DIN EN 50 041
- Actuator head can be repositioned in 4 x 90° steps
- Actuating shaft can be turned 360°
- Shaft bore ø 10 mm
- Special version only for dust Ex zone 22 available

// EX 335 V.S

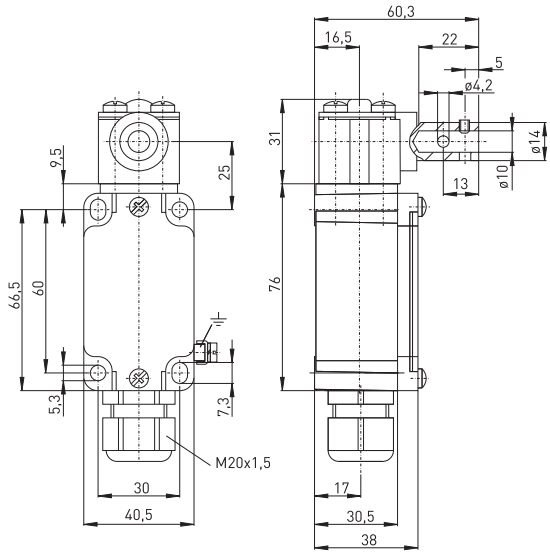

Technical data

Standards	EN 60947-5-1; EN 1088; EN 60079-0, EN 60079-1, EN 60079-7, EN 60079-31; EN ISO 13849-1
Design	mounting details to DIN EN 50 041
Enclosure	zinc die casting, enamelled
Switch insert	Ex 95
Degree of protection	IP 67 according to EN 60529
Contact material	silver
Switching system	slow action, positive break NC contact ⊖
Switching elements	change-over contact with double break Zb or 2 NC contacts, galvanically separated contact bridges
Connection	M3 screw clamps
Cable section	max. 1.5 mm² (incl. conductor ferrules)
B_{10d} (10 % load)	2 million
T_M	max. 20 years
Cable entry	M20 x 1.5
U_{imp}	4 kV
U_i	250 V
I_{the}	6 A
I_e/U_e	6 A/250 VAC; 0.25 A/230 VDC
Utilisation category	AC-15, DC-13
Max. fuse rating	6 A gL/gG D-fuse
Ambient temperat. Ta	–20 °C ... +60 °C
Mechanical life	> 1 million operations
Ex marking	Ⓔx II 2G Ex de IIC T6/T5 Gb, II 2D Ex tb IIIC T80°C/T95°C Db IECEx Ex de IIC T6/T5 Gb, Ex tb IIIC T80°C/T95°C Db
Approvals	DMT 01 ATEX E 178, IECEx BVS 07.0014

Contact variants: switch travel/contacts

	Slow action
1 NC/1 NO contact	**Ex 335 V.S 1Ö/1S** 180° 10° 0° 10° 180° 23-24 11-12 12° 8° 8° 12°
2 NC contacts	**Ex 335 V.S 2Ö** 180° 12° 0° 12° 180° 11-12 21-22 8° 8°

Type code Ex 335 V10S 1Ö/1S-3D

- 3D: Equipment Categ. 3D, dust Ex zone 22
- 1Ö/1S: Contact type 1Ö/1S, (2Ö)
- V10S: Actuator V10S shaft bore Ø 10 mm
- 335: Series
- Ex: Ex certified component

Ex safety switches for hinged guards
// Series Ex 355 V.S

Features/Options
- Ex zone 1 and 21
- With gold-plated contacts available on request
- Mounting details to DIN EN 50 041
- Actuator head can be repositioned in 4 x 90° steps
- Actuating shaft can be turned 360°
- Shaft bore ø 10 mm
- Special version only for dust Ex zone 22 available

// EX 355 V.S

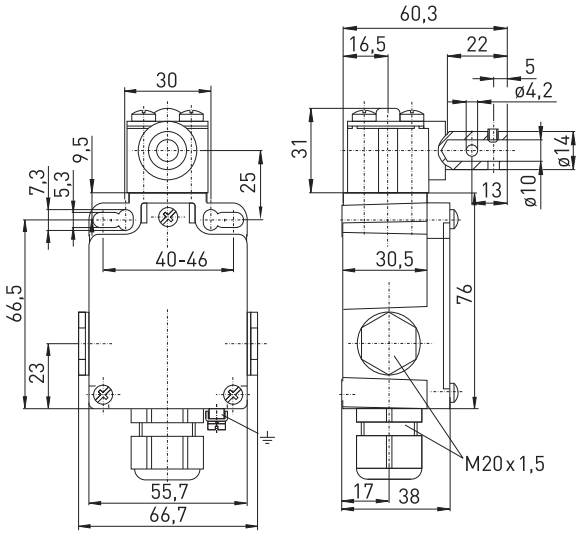

Technical data

Standards	EN 60947-5-1; EN 1088; EN 60079-0, EN 60079-1, EN 60079-7, EN 60079-31; EN ISO 13849-1
Design	mounting details to DIN EN 50 041
Enclosure	zinc die casting, enamelled
Switch insert	Ex 95
Degree of protection	IP 67 according to EN 60529
Contact material	silver
Switching system	slow action, positive break NC contact ⊖
Switching elements	change-over contact with double break Zb or 2 NC contacts, galvanically separated contact bridges
Connection	M3 screw clamps
Cable section	max. 1.5 mm² (incl. conductor ferrules)
Cable entry	M20 x 1.5
B_{10d} (10 % load)	2 million
T_M	max. 20 years
U_{imp}	4 kV
U_i	250 V
I_{the}	6 A
I_e/U_e	6 A/250 VAC; 0.25 A/230 VDC
Utilisation category	AC-15, DC-13
Max. fuse rating	6 A gL/gG D-fuse
Ambient temperat. Ta	–20 °C ... +60 °C
Mechanical life	> 1 million operations
Ex marking	Ⓔx II 2G Ex de IIC T6/T5 Gb, II 2D Ex tb IIIC T80°C/T95°C Db IECEx Ex de IIC T6/T5 Gb, Ex tb IIIC T80°C/T95°C Db
Approvals	BVS 04 ATEX E 126, IECEx BVS 07.0013

Contact variants: switch travel/contacts

	Slow action
1 NC/1 NO contact	**Ex 355 V.S 1Ö/1S** 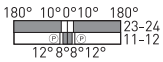
2 NC contacts	**Ex 355 V.S 2Ö** 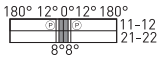

Type code

Ex 355 V10S 1Ö/1S-3D

- Equipment Categ. 3D, dust Ex zone 22
- Contact type 1Ö/1S, (2Ö)
- Actuator V10S shaft bore Ø 10 mm
- Series
- Ex certified component

Features/Options
- Factory-mounted pins
- Suitable for Ex 335 V10S, Ex 95 SB-10mm and Ex 335 V10S
- Suitable only in connection with hinges F and L

Features/Options
- Locating pins
- One blanking plug
- Two M 5 x 20 screws to ISO 7380

// Universal joint K2

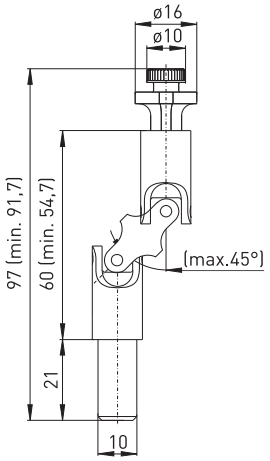

// Fixed hinge F

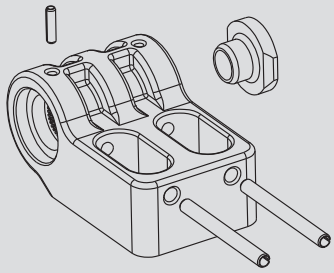

// Universal joint K2

// Fixed hinge F

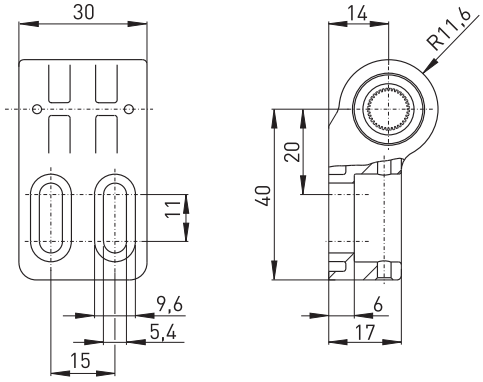

Order number	
Universal joint K2	01.08.0145

Order number	
Fixed hinge F	01.08.0146

Features/Options
- Locating pins
- One blanking plug
- Two M 5 x 20 screws to ISO 7380

// Adjustable hinge L

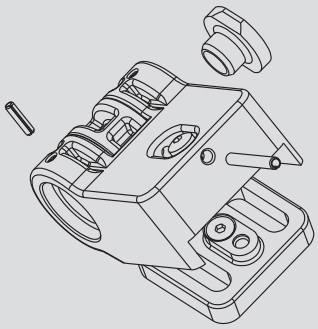

// Adjustable hinge L

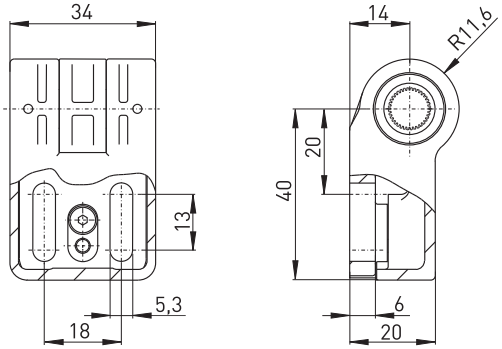

Order number	
Adjustable hinge L	01.08.0147

MOULDING OF SWITCH INSERTS FOR POSITION SWITCHES

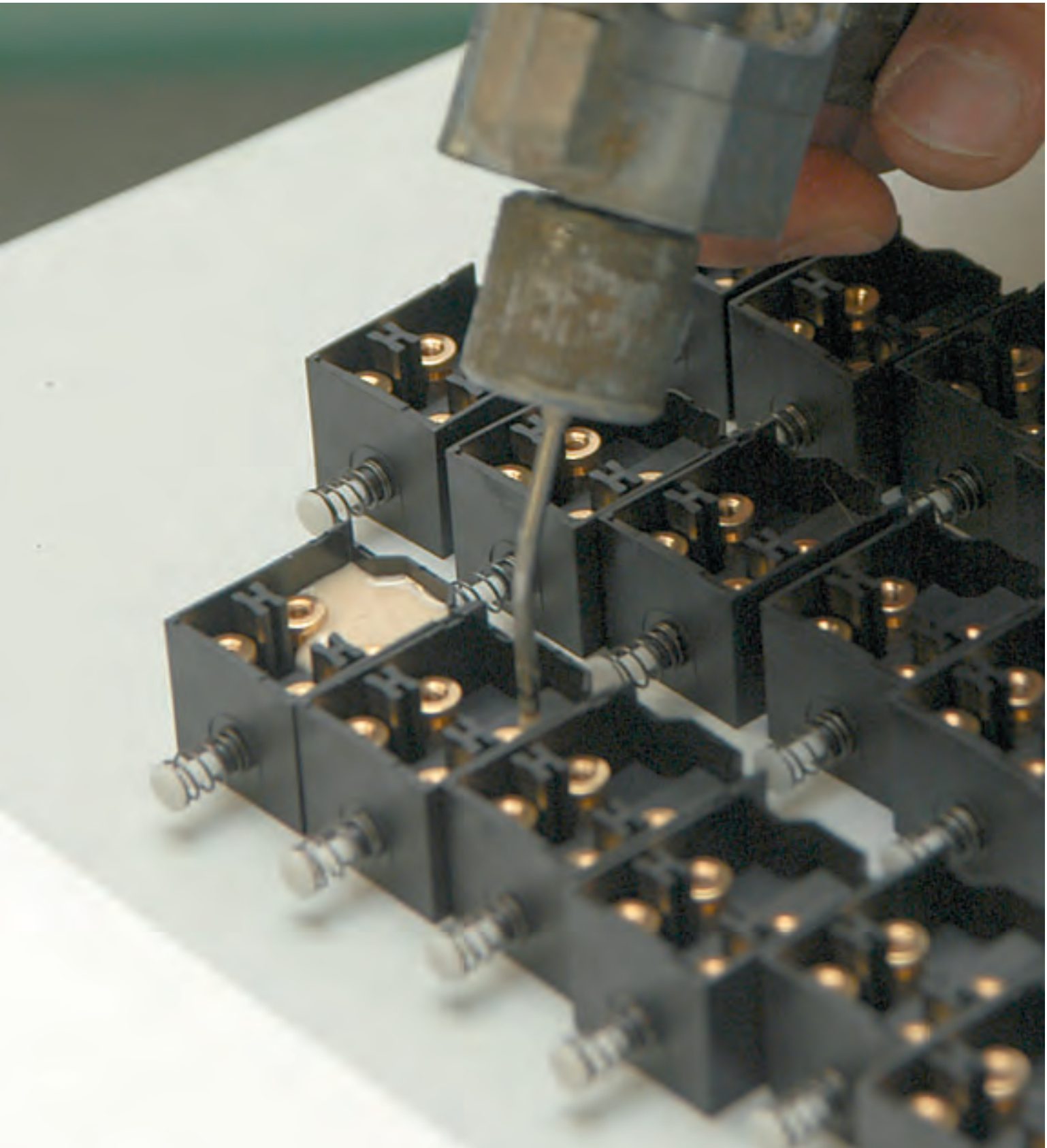

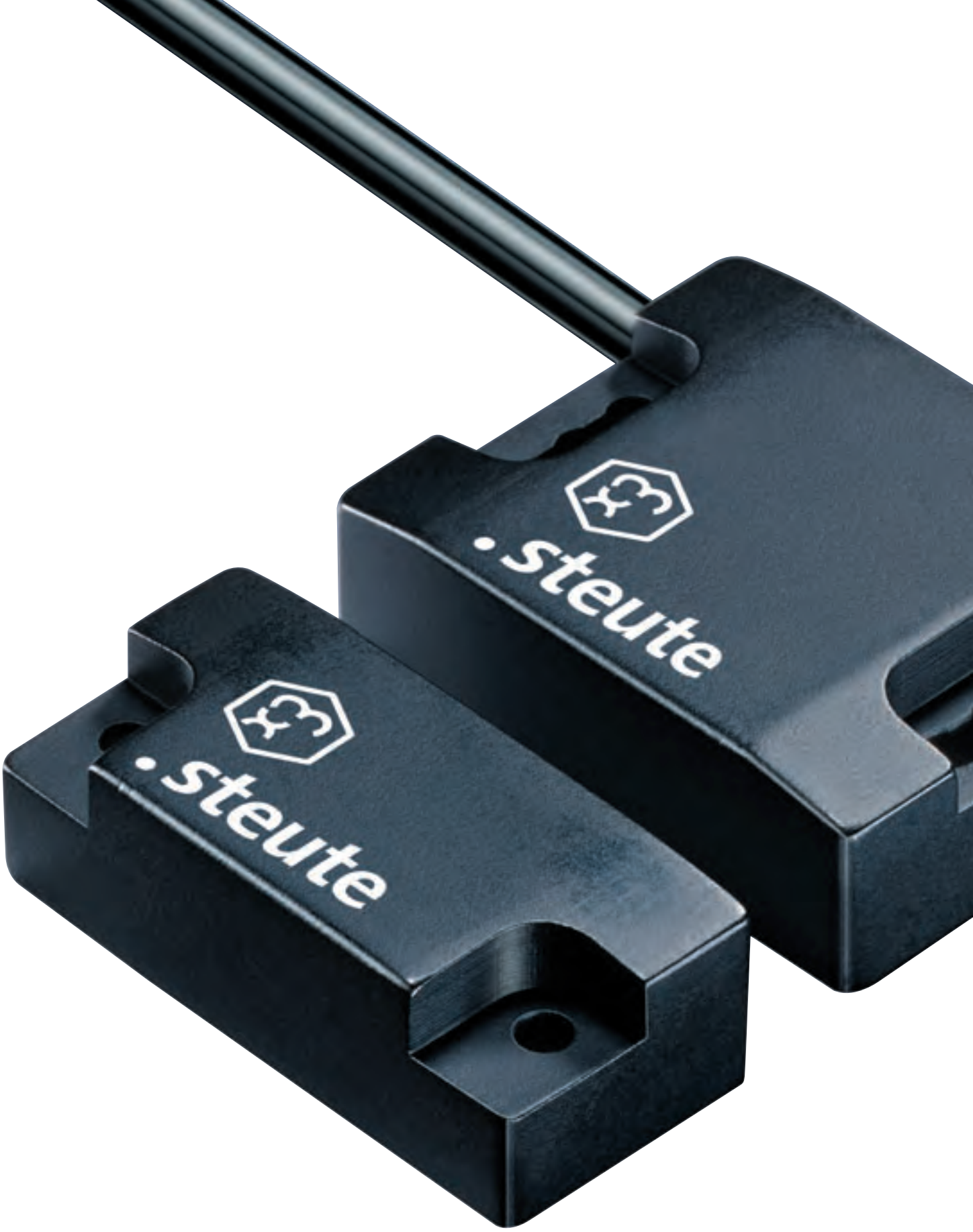
steute
steute

Ex safety sensors

Ex RC Si 56

Ex safety sensors

Range of application

The Ex safety sensors are suitable for monitoring the position of sliding, hinged and removable protective doors. They can only be used for safety duties to DIN VDE 0660-209 in combination with a safety guard monitor for protection up to Control Category 4 to EN 954-1.

The use of safety sensors is of particular advantage in cases where extremely dirty conditions can occur or high hygienic standards need to be maintained. This is provided by the simplicity of cleaning the units. A further advantage is the facility for concealed mounting behind non-magnetic materials.

Working surfaces and storage areas can be arranged without the need for dust-collecting edges or other functionally required cutouts or projections. The safety sensors can also be applied in cases where a precise approach is not possible and greater tolerances are required.

Design and operating principle

These devices comprise a multi-channel safety sensor and an actuating magnet. The magnetic safety sensors are actuated by a coded actuator without any mechanical contact. The devices can be selected with one NC and one NO contact or with two NC contacts. All described safety sensors are supplied with a pre-wired cable.

The safety sensors are protected to degree of protection IP 67.

The mounting site of safety sensors must be free of magnetic fields.

All Ex safety sensors shown in this chapter bear the CE mark according to the Machinery Directive 2006/42/EC and according to ATEX 94/9/EC. The Ex safety sensors per equipment category 3G/D bear the CE mark without the number of the notified body and have received a CE declaration of manufacturer conformity.

Application

On sliding doors

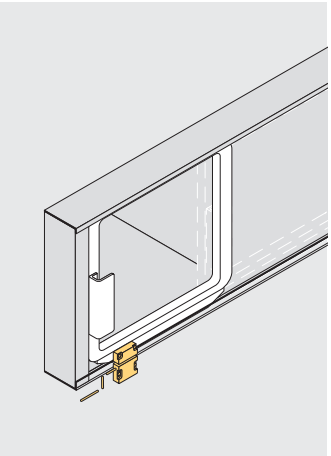

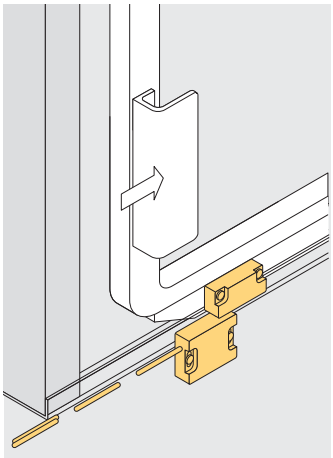

On hinged doors

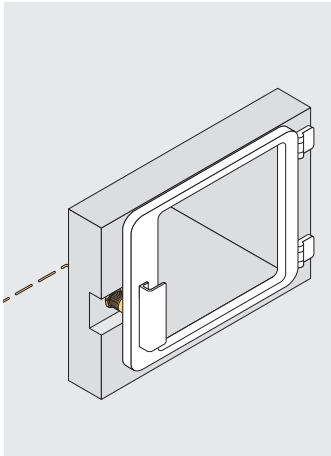

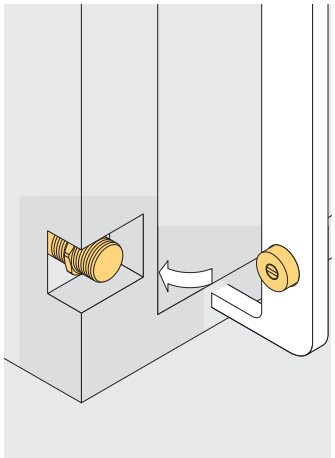

Ex safety sensors, cylindrical form
// Series Ex RC Si M30

Features/Options
- Ex zone 1 and 21
- Metal enclosure
- Available in stainless steel enclosure
- Reed contacts, coded
- Actuation from front
- Switching distance up to 8 mm
- Special version only for gas Ex zone 2 and dust Ex zone 22 available

// EX RC SI M30

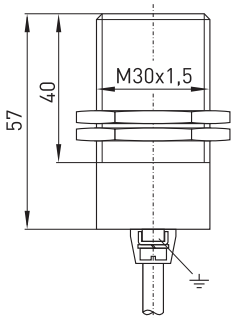

Technical data

Standards	EN ISO 13849-1; IEC 60947-5-3 / PDF-M*; EN 954-1; EN 60079-0; EN 60079-18; EN 61241-0, EN 61241-1
Enclosure	brass, nickeled or stainless steel 1.4571
Defined object	actuator Ex MC 30 order No. 05.00.8213, Ex MC 30-NIRO order No. 05.00.8216
Switching system	reed contacts, 1 NC/1 NO or 2 NC contacts
Degree of protection	IP 67 per EN 60529
Connection	cable, 5 x H05 VV-F 5G, 0.5 mm², length 1, 2, 5 or 10 m
B_{10d} (10% load)	1 million
T_M	max. 20 years
MTTFd	>100 years
I_e/U_e	max. 125 mA, with LED: 20 mA/24 VDC
Switching voltage	max. 30 VDC
Voltage drop at I_e	2,5 V, with LED: 3 V
Switching frequency	5 Hz
Limit distances	s_{ao} 8 mm, s_{ar} 24 mm
Repeatability	< 0.5 mm
Ambient temperat. Ta	-20 °C ... +70 °C
Mechanical life	> 10 mio. operations
Ex marking	Ⓔx II 2G Ex mb II T6, II 2D Ex tD A21 IP67 T80°C IECEx Ex mb II T6, Ex tD A21 IP67 T80°C
Approvals	PTB 05 ATEX 2024 X; IECEx PTB 07.0008 X

* The control category of the safety sensor is only achieved in combination with a safety module.

Contact variants: switch travel/contacts

	without LED	with LED
1 NC/1 NO contact	Ex RC Si M30 1Ö/1S 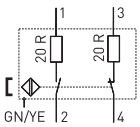	Ex RC Si M30 1Ö/1S-LED 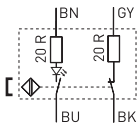
2 NC contacts	Ex RC Si M30 2Ö 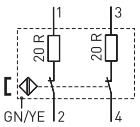	Ex RC Si M30 2Ö-LED 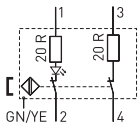

Type code

Ex RC Si M30 1Ö/1S-NIRO-B-LED-3G/D

- Equipm. cat. 3G/D, gas Ex z. 2 a. dust Ex z. 22
- Built-in LED
- B Mounting thread M16 x 1.5
- Stainless steel enclosure
- 1 NC/1 NO contact (2Ö)
- Series, Enclosure diameter M30
- Safety
- Magnetic sensor
- Ex certified component

Ex safety sensors, cylindrical form
// Series Ex RC Si M30, Actuator

Features/Options
- Ex RC Si M30-NIRO: stainless steel enclosure 1.4571, actuator available with stainless steel enclosure 1.4571: MC30-NIRO
- Ex RC Si M30-B: variant with mounting thread M16 x 1.5

Note
The actuator is not included in the delivery of the switches.

// Mounting thread B

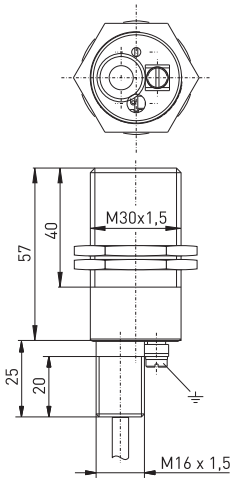

// Actuating magnet Ex MC 30

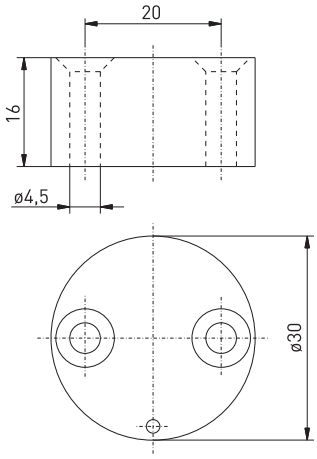

// Switching capacity

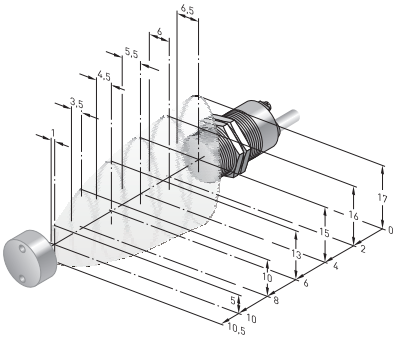

Ex safety sensors, rectangular form
// Series Ex RC Si 56

Features/Options
- Ex zone 1 and 21
- Thermoplastic enclosure
- Long life
- Reed contacts, coded
- Actuation from front
- Switching distance up to 7 mm
- With pre-wired cable, cable length 1 metre
- Special version only for gas Ex zone 2 and dust Ex zone 22 available

// EX RC SI 56

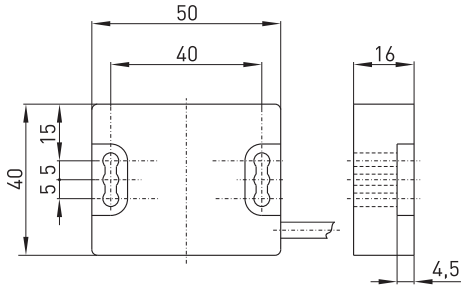

Technical data

Standards	EN ISO 13849-1; IEC 60947-5-3 / PDF-M*; EN 60079-0; EN 60079-18; EN 61241-0, EN 61241-1
Enclosure	glass-fibre reinforced thermoplastic, self-extinguishing, A3XZG5
Defined object	actuator Ex MC 56 order No. 05.00.8218, Ex MC 56-3 order No. 05.00.8219
Switching system	reed contacts, 1 NC/1 NO or 2 NC contacts
Degree of protection	IP 67 per EN 60529
Connection	cable, 4 x AWG 24, length 1, 2, 5 or 10 m
B_{10d} (10% load)	1 million
T_M	max. 20 years
MTTFd	>100 years
I_e/U_e	max. 125 mA, with LED: 20 mA/24 VDC
Switching voltage	max. 30 VDC
Voltage drop at I_e	2,5 V, mit LED: 3 V
Switching frequency	5 Hz
Limit distances	s_{ao} 7 mm, s_{ar} 23 mm
Repeatability	< 0.5 mm
Ambient temperat. Ta	T6: -20 °C ... +70 °C; T5: -20 °C ... +85 °C
Mechanical life	> 10 mio. operations
Ex marking	Ⓔx II 2G Ex mb II T6/T5, II 2D Ex tD A21 IP67 T80°C/T95°C IECEx Ex mb II T6/T5, Ex tD A21 IP67 T80°C/T95°C
Approvals	PTB 08 ATEX 2027 X, IECEx . . .

* The control category of the safety sensor is only achieved in combination with a safety module.

Contact variants: switch travel/contacts

	without LED	with LED
1 NC/1 NO contact	Ex RC Si 56 1Ö/1S 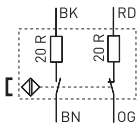	Ex RC Si 56 1Ö/1S-LED 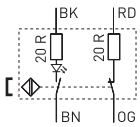
2 NC contacts	Ex RC Si 56 2Ö 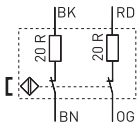	Ex RC Si 56 2Ö-LED 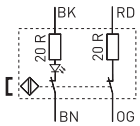

Type code

Ex RC Si 56 1Ö/1S-LED-3G/D

- Equipm. cat. 3G/D, gas Ex z. 2 a. dust Ex z. 22
- Built-in LED
- 1 NC/1 NO contact (2Ö)
- Series, Enclosure diameter M30
- Safety
- Magnetic sensor
- Ex certified component

Ex safety sensors, rectangular form
// Series Ex RC Si 56, Actuator

Features/Options
Ex MC 56
- compact design
- suitable for 30 mm profiles
Ex MC 56-3
- suitable for 30, 40 and 50 mm profiles

Note
The actuator is not included in the delivery of the switches.

// Actuating magnet Ex MC 56

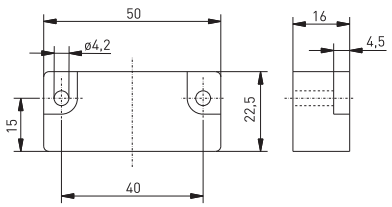

// Actuating magnet Ex MC 56-3

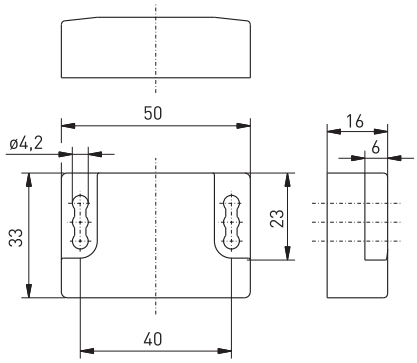

// Switching capacity

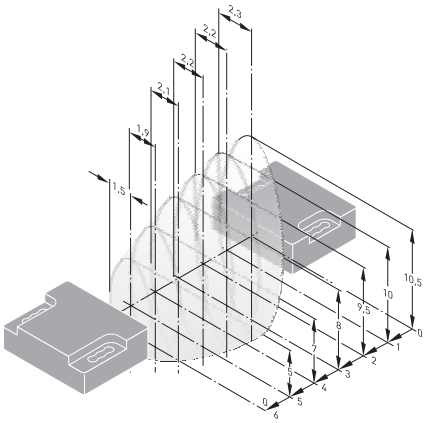

Ex safety sensors, rectangular form
// Series Ex HS Si 4

Features/Options
- Ex zone 1 and 21
- Thermoplastic enclosure
- Hall elements, coded
- Actuation from front
- Switching distance up to 8 mm
- Special version only for gas Ex zone 2 and dust Ex zone 22 available

// EX HS SI 4

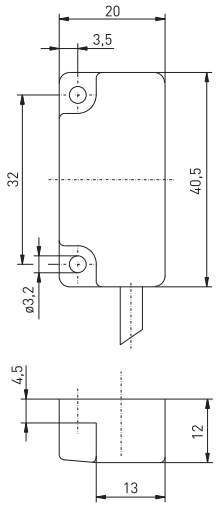

Technical data

Standards	EN 60079-0; EN 60079-18; EN 61241-0; EN 61241-18; EN 60947-5-3 /PDF-M*; EN 1088; EN ISO 13849-1
Enclosure	glass-fibre reinforced thermoplastic, self-extinguishing, A3XZG5
Defined object	actuator Ex MC 4 order No. 05.00.8222
Switching system	hall sensor, 2 galvanically separated channels, 1 NC/1 NO or 2 NC contacts
Degree of protection	IP 67 per EN 60529
Connection	cable, 6 x AWG 26, 1 m, max. 15 m
T_M	max. 20 years
MTTFd	>100 years
Utilisation category	DC-13; DC-12
Switching voltage	24 VDC
Switching current	max. 40 mA per channel
Switching capacity	max. 1.2 W
No-load supply current I_0	max. 6 mA per channel
Input voltage	10 ... 30 VDC
Voltage drop	max. 2.5 VDC
Switch-on/-off time	< 1 ms
Max. fuse rating	< 50 mA internal reversible fuse
Switching frequency	max. 1000 Hz
Ambient temperat. Ta	–20 °C ... +60 °C
Mechanical life	> 10 mio. operations
Switching distances	s_{ao} 6 mm, s_{ar} 20 mm
Axial misalignment	max. 4 mm
Ex marking	Ⓔx II 2G Ex mb II T6, II 2D Ex mbD 21 T80°C IECEx Ex mb II T6, Ex mbD 21 T80°C
Approvals	BVS 08 ATEX E150 X; IECEx BVS 08.0054X

* The control category of the safety sensor is only achieved in combination with a safety module.

Contact variants: switch travel/contacts

	Bi-directional actuation
1 NC/1 NO contact	Ex HS Si 4 1Ö/1S
2 NC contacts	Ex HS Si 4 2Ö

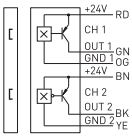

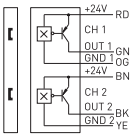

Type code

Ex HS Si 4 1Ö/1S-3G/D

- Equipm. cat. 3G/D, gas Ex z. 2 a. dust Ex z. 22
- 1 NC/1 NO contact (2Ö)
- Series
- Safety
- Hall sensor
- Ex certified component

Note
The actuator is not included in the delivery of the switches.

// Actuator Ex MC 4

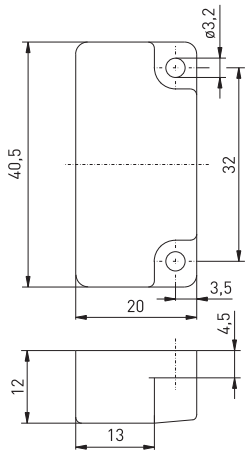

// Switching capacity

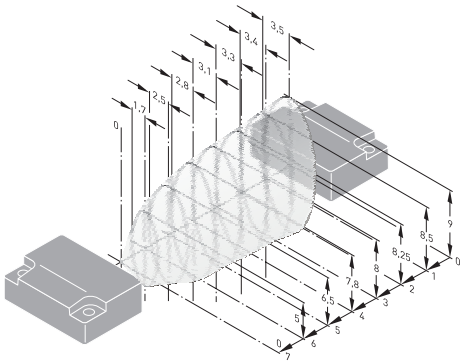

Safety relay module
// Series SRM 21 RT2

Features/Options
- Enclosure width: 22.5 mm
- 2 NC contacts or NC/NO combination can be connected
- Feedback circuit
- 2 enabling paths
- 1 transistor output
- Manual or automatic reset
- Switching position indication by LED

// SRM 21 RT2

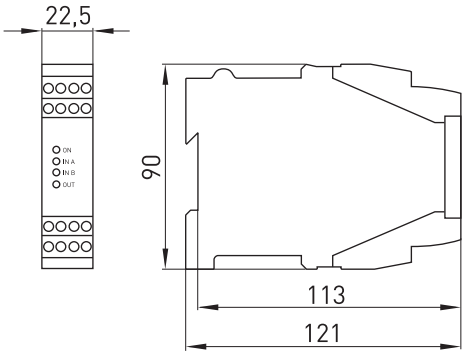

Technical data

Standards	EN ISO 13849-1; EN 62061; EN 1088, EN 60204-1, BG-GS-ET 20; EN 60947-5-3/PDF-M, EN 954-1
Enclosure	polycarbonate, terminal block polyamid V0
Mounting	DIN rail mounting, screw terminals
Degree of protection	enclosure IP 40, terminals IP 20 per IEC 60529
Safety-relevant data	
EN 954-1	category 4
EN 60204-1	stop category 0
EN 62061	SILCL 3
EN ISO 13849-1	PL e
h_{op}	8 h/d
d_{op}	220 d/a
t_{Zyklus}	30 s
T_M	max. 20 years
MTTFd	>40 years
DC/ DC_{avg}	>99 %
U_e	24 VDC ±15 %
I_e	0.125 A
Inputs	1 NC/1 NO or 2 NC inputs, 1 feedback circuit, 1 start input (monitored)
Outputs	2 enabling paths, 1 transistor output as signalling output
I_e/ U_e of enabling paths	3 A/ 230 VAC, 2 A/ 24 VDC
Utilisation category	AC-15; DC-13
Max. fuse rating	power supply 2A slow blow enabling paths 6A gL/ gG D fuse
Display	1 LED for supply voltage, 1 LED each for input A and B, 1 LED for authorisation
Ambient temperat. Ta	0 °C ... +55 °C
Shock resistance	3g
Approvals	

Type code	SRM 21 RT2

2 inputs
automatic reset
manual reset
1 transistor output
2 enabling paths
Safety relay module

// Wiring example

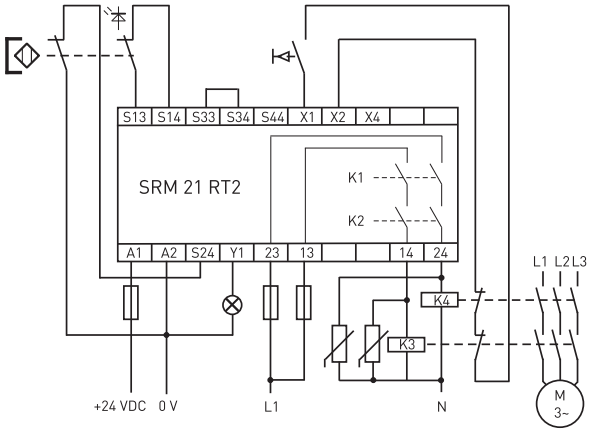

- 2-channel: monitoring of one magnetic safety sensor with 2 NC contacts
- Feedback circuit
- Cross-wire detection
- With manual reset/start
- Y1 high upon authorisation
- Control Category 4

// Wiring example

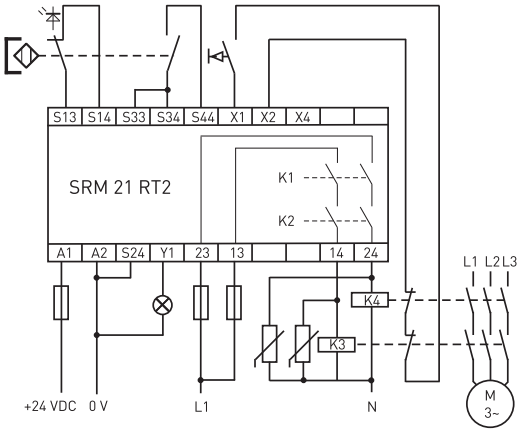

- 2-channel: monitoring of one magnetic safety sensor with 2 NC contacts
- Feedback circuit
- Without cross-wire detection
- With manual reset/start
- Y1 high upon authorisation
- Control Category 4

// Wiring example

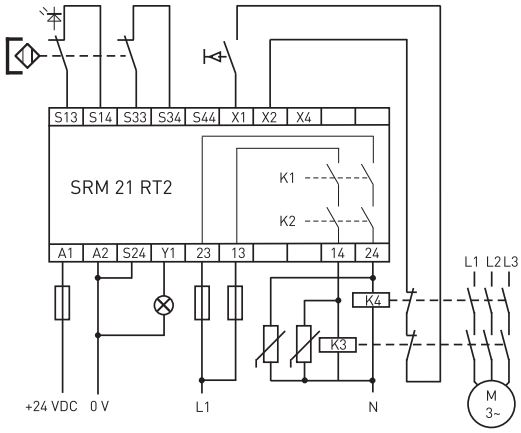

- 2-channel: monitoring of one magnetic safety sensor with 1 NC and 1 NO contact
- Feedback circuit
- Without cross-wire detection
- With manual reset/start
- Y1 high upon authorisation
- Control Category 4

Features/Options
- Enclosure width: 22.5 mm
- 2 NC contacts combination can be connected
- Feedback circuit
- 2 enabling paths
- 1 transistor output
- Manual or automatic reset
- Switching position indication by LED

// SRM 21 MULTI

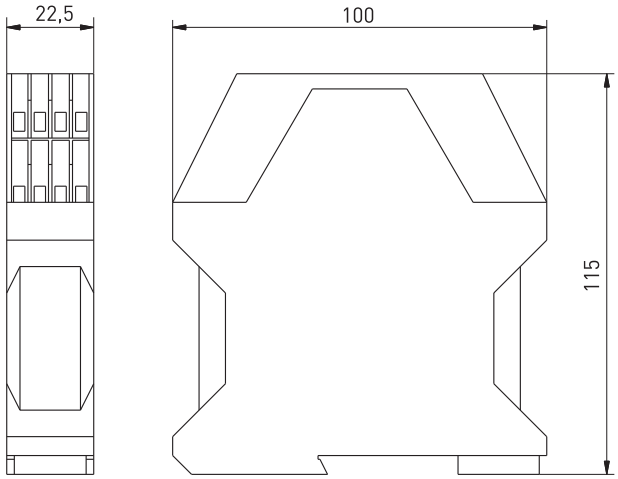

Technical data

Standards	EN ISO 13849-1; EN 62061; EN 1088, EN 60204-1, EN 60947-5-1, EN 60947-5-3/-PDF-M, EN 954-1, DIN EN 61508, 2004/108/EC
Enclosure	polyamid PA 6.6 V0
Mounting	DIN rail mounting
Degree of protection	enclosure and terminals IP 20 per IEC 60529
Safety-relevant data	
EN 954-1	category 4
EN 60204-1	stop category 0
EN 61508	SIL 3
PFH	2,2 x 10-9
PFD	4.64 x 10-6
EN ISO 13849-1	PL e
T_M	max. 20 years
MTTFd	100 years
DC/ DC_{avg}	>99 %
U_e	24 VDC -20 % ... +25 %
I_e	0.125 A
Inputs	2 NC inputs, 1 feedback circuit, 1 start input (monitored)
Outputs	2 enabling paths, 1 transistor output as signalling output
I_e/ U_e of enabling paths	3A/ 230VAC, 5A/ 24VDC
Utilisation category	AC-15; DC-13
Max. fuse rating	power supply 2 A slow blow, enabling paths 6 A gL/ gG D fuse
Display	2 LEDs for inputs, 2 LEDs for outputs, 1 LED for supply voltage, 1 LED for fault
Ambient temperat. Ta	-25 °C ... +55 °C
Shock resistance	10g
Approvals	TÜV

Type code	SRM 21 Multi

multi-functional
1 transistor output
2 enabling paths
Safety relay module

// Wiring example

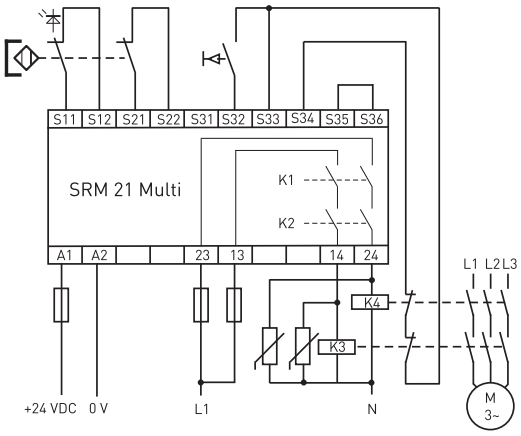

- 2-channel: monitoring of one magnetic safety sensor with two NC contacts
- cross-wire detection, monitored start and feedback circuit
- S31 is high on authorisation
- up to PL e

// Wiring example

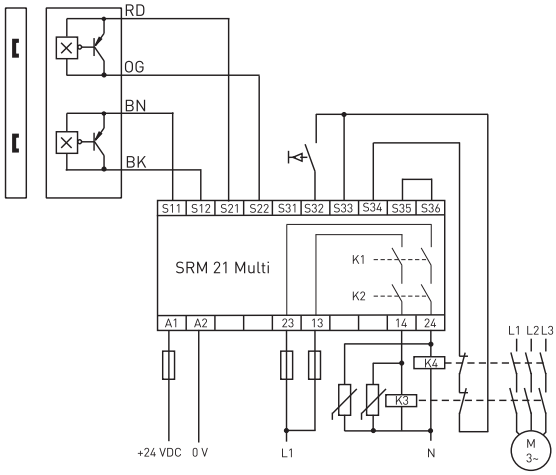

- 2-channel: monitoring of one safety hall sensor with two semiconductor outputs as NC
- cross-wire detection, monitored start and feedback circuit
- S31 is high on authorisation
- up to PL e

// Wiring example

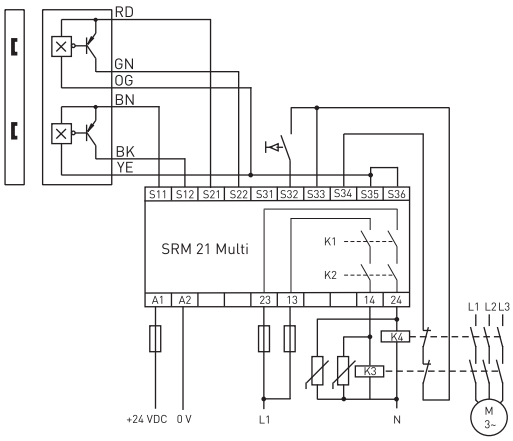

- 2-channel: monitoring of one safety hall sensor with two semiconductor outputs as NC
- cross-wire detection, monitored start and feedback circuit
- S31 is high on authorisation
- up to PL e

Ex emergency pull-wire switches

Ex emergency pull-wire switches

Range of application

Ex emergency pull-wire switches are of great importance for the man-machine interface in the area of industrial applications. They are, for example, applied on transport and conveyor systems. After manual actuation, work and functional processes are initiated or switched off.

Once the new harmonised European standard EN 60947-5-5 concerning functional aspects and design guidelines for emergency-stop devices has come into effect, new requirements will have to be met by these command devices. All Ex emergency pull-wire switches described in this chapter meet the requirements of this standard.

Design and operating principle

On Ex emergency pull-wire switches the emergency-stop command can be initiated from any point along the pull-wire. They have a positive linkage between the NC contacts and the pull-wire. The emergency pull-wire switches are brought into the operational state by pre-tensioning the pull-wire, i.e. the NC contacts are then closed and the NO contacts are open. All devices are equipped with wire-breakage detection. The accessories required for installation are listed at the end of this chapter.

Ex emergency pull-wire switches without mechanical latching VD or VS do not conform to the IEC 609745-5-5. It is possible to meet the requirements of these two standards by suitable measurement of the circuitry and control technology.

There are devices with one- and two-side actuation. The wire length, the number of contacts and the mounting position, in the middle or on one side of the system, are the main features when selecting an emergency pull-wire switch.

All Ex emergency pull-wire switches shown in this chapter bear the CE mark according to the Machinery Directive 2006/42/EC and according to ATEX 94/9/EC. The Ex safety switches for hinged guards per equipment category 3D bear the CE mark without number of the notified body and have received a CE declaration of manufacturer conformity.

Application

one-side actuation

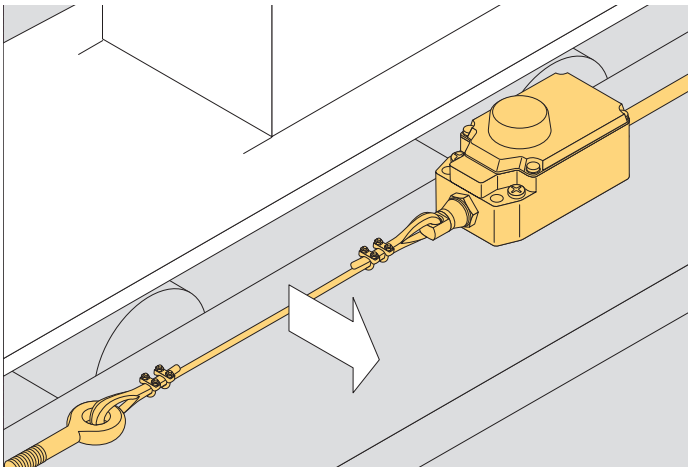

two-side actuation

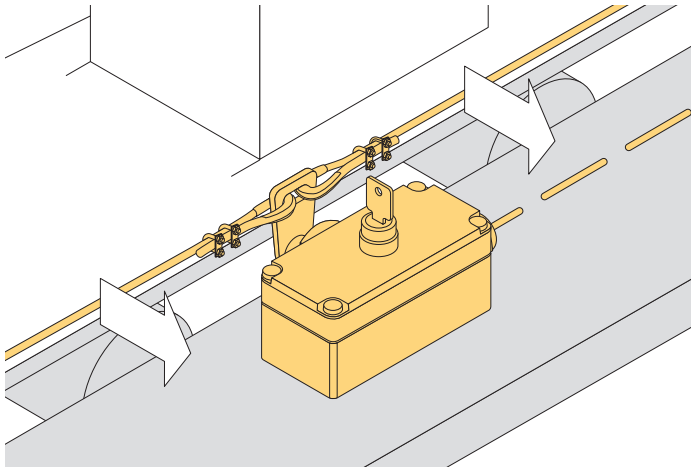

Selection table
Ex emergency pull-wire switches

// Series		// Maximum pull-wire length		
		→	←→	
				
Ex ZS 71, from page 126 - One-side actuation - 2 contacts IECEx	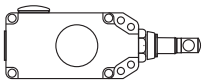	20 m	–	
Ex ZS 73, from page 128 and 134 - One-side actuation: Ex ZS 73 - Two-side actuation: Ex ZS 73 S - 2 contacts IECEx	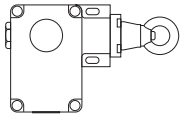	50 m	2 x 50 m	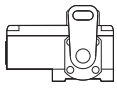
Ex ZS 75, from page 130 and 136 - One-side actuation: Ex ZS 75 - Two-side actuation: Ex ZS 75 S - 4 contacts IECEx	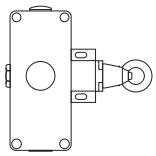	50 m	2 x 50 m	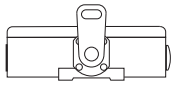
Ex ZS 80, from page 132 - One-side actuation - 2 contacts IECEx	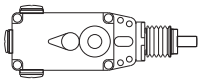	75 m	–	
Ex ZS 90 S, from page 140 - Two-side actuation - 4 contacts	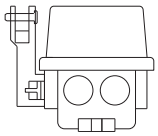	–	2 x 50 m	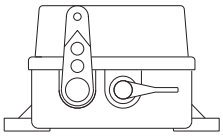

Ex emergency pull-wire switches, one-side actuation
// Series Ex ZS 71

Features/Options
- Ex zone 1 and 21
- 2 contacts
- Small design
- Wire length up to 20 m
- 2 various spring force variants (actuating forces): 55 N for max. 5 m, 200 N for 5-20 m
- Wire pull and breakage detection
- Special version only for dust Ex zone 22

// EX ZS 71

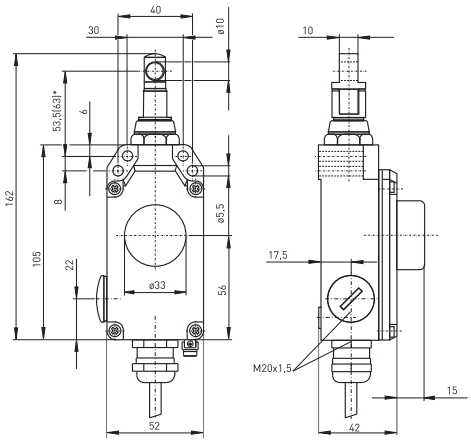

* 63 mm for version with 200 N pre-stress force

Technical data

Standards	EN 60947-5-1, -5; EN 60079-0, EN 60079-1, EN 60079-31; EN ISO 13849-1
Enclosure	aluminium die casting, enamel finish
Cover	glass-fibre reinforced, shock-proof thermoplastic, ultramid
Switch insert	Ex 14
Degree of protection	Ex ZS 71 VD, Ex ZS 71 WVD: IP 65; Ex ZS 71 VS and Ex ZS 71 WVS: IP 54 to EN 60529
Contact material	silver
Switching system	slow action, positive break NC contacts ⊖
Switching elements	change-over contact with double break or 2 NC contacts
Connection	cable H05VV-F, length 3 m
Cable section	4 x 0.75mm² (incl. conductor ferrules)
B_{10d} (10 % load)	Ex ZS 71: 2 million Ex ZS 71 VD/VS: 200 000
T_M	max. 20 years
U_{imp}	4 kV
U_i	250 V
I_{the}	T6: 6 A, T5: 3 A
Utilisation category	AC-15, DC-13
I_e/U_e	6 A/250 VAC, 0.25 A/230 VDC
Max. fuse rating	6 A gL/gG D-fuse
Ambient temperat. Ta	T6: –20 °C ... +65 °C, T5: –20 °C ... +95 °C
Mechanical life	Ex ZS 71: > 1 million operations Ex ZS 71 VD/VS: > 100 000 operations
Max. wire length	20 m
Features	wire pull and breakage detection
Ex marking	Ⓔx II 2G Ex d IIC T6/T5 Gb, II 2D Ex tb IIIC T80°C/T95°C Db IECEx Ex d IIC T6/T5 Gb, Ex tb IIIC T80°C/T95°C Db
Approvals	PTB 06 ATEX 1065 X, IECEx PTB 07.0034 X

Contact variants: switch travel/contacts

	Slow action
1 NC/1 NO contact	**Ex ZS 71 1Ö/1S** 5 3 0 3 5 BK-GY BN-BU ⊖ 4 1,5 1,5 4 ⊖
2 NC contacts	**Ex ZS 71 2Ö** 5 0 5 BK-GY BN-BU ⊖ 4 1,5 1,5 4 ⊖

Type code Ex ZS 71 1Ö/1S WVD-A/55 N-3D

- Ex zone 22
- 55 N Pre-stress force (200 N))
- A Position indicator
- VD Push button release (VS key release, blank without latching)
- W Watertight collar
- 1 NC/1 NO contact (2Ö)
- Series
- Emergency pull-wire switch
- Ex certified component

At 3 m distance intermediate wire supports are required. One wire thimble is provided. Details related to pre-stress and actuating forces see chapter accessories in the appendix.

Ex emergency pull-wire switches, one-side actuation
// Series Ex ZS 71, variants

Features/Options
- Indicator lamps for zone 22 for 24VDC are indicated at the end of this chapter
- Indicator lamp position in the left side cable entry
- Collar W to protect against the entry of foreign bodies

Features/Options
- Ex emergency pull-wire switches are also available without mechanical latching
- Version for equipment category 3D, dust Ex zone 22 is equipped with a wiring compartment

// Watertight collar W

// Key release VS

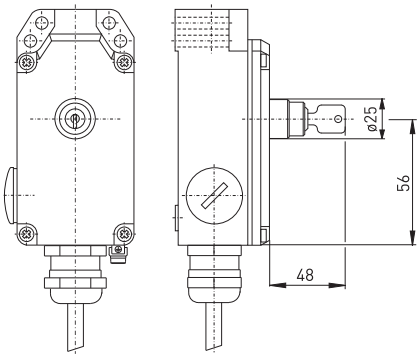

// Position indicator A

// Position indicator A

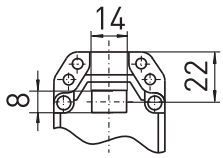

Ex emergency pull-wire switches, one-side actuation
// Series Ex ZS 73

Features/Options
- Ex zone 1 and 21
- 2 contacts
- Wire length up to 50 m
- 4 various spring force variants (actuating forces), adjustable actuating force: 295-390 N for 30-50 m, 195-275 N for 20-30 m, 120-180 N for 10-20 m, 80-100 N for max. 10 m
- Wire pull and breakage detection
- Special version only for dust Ex zone 22

// EX ZS 73

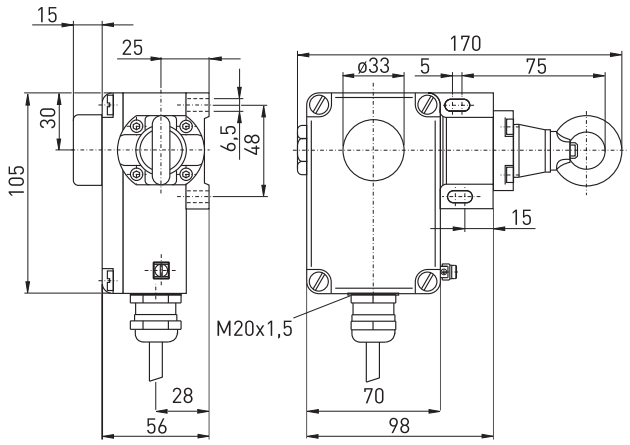

Technical data

Standards	EN 60947-5-1, -5; EN 60079-0, EN 60079-1, EN 60079-31; EN ISO 13849-1
Enclosure	aluminium die casting, enamel finish; ZS 73 NIRO: aluminium die casting, hard-coated and enamelled
Cover	glass-fibre reinforced, shock-proof thermoplastic, ultramid
Switch insert	Ex 14
Degree of protection	Ex ZS 73 WVD: IP 65; Ex ZS 73 VD, Ex ZS 73 VS and Ex ZS 73 WVS: IP 54 to EN 60529
Contact material	silver
Switching system	slow action, positive break NC contacts ⊖
Switching elements	change-over contact with double break or 2 NC contacts
Connection	cable H05VV-F, length 3 m
Cable section	4 x 0.75mm² (incl. conductor ferrules)
B_{10d} (10 % load)	Ex ZS 73: 2 million; Ex ZS 73 VD/VS: 200 000
T_M	max. 20 years
U_{imp}	4 kV
U_i	250 V
I_{the}	T6: 6 A, T5: 3 A
Utilisation category	AC-15, DC-13
I_e/U_e	6 A/250 VAC, 0.25 A/230 VDC
Max. fuse rating	6 A gL/gG D-fuse
Ambient temperat. Ta	T6: –20 °C ... +65 °C; T5: –20 °C ... +95 °C
Mechanical life	Ex ZS 73: > 1 million operations Ex ZS 73 VD/VS: > 100 000 operations
Max. wire length	50 m
Features	wire pull and breakage detection
Ex marking	Ⓔx II 2G Ex d IIC T6/T5 Gb, II 2D Ex tb IIIC T80°C/T95°C Db IECEx Ex d IIC T6/T5 Gb, Ex tb IIIC T80°C/T95°C Db
Approvals	PTB 06 ATEX 1066 X, IECEx PTB 06.0034 X

Contact variants: switch travel/contacts

	Slow action
1 NC/1 NO contact	Ex ZS 73 1Ö/1S 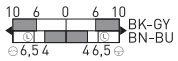
2 NC contacts	Ex ZS 73 2Ö 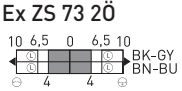

Type code **Ex ZS 73 1Ö/1S WVD-NIRO/80-100 N-3D**

- Zone 22
- Pre-stress force (120-180 N, 195-275 N, 295-390 N)
- NIRO Pull-wire unit
- VD Push button release (VS key release, blank without mechanical latching)
- W Watertight collar
- 1 NC/1 NO contact (2Ö)
- Series
- Emergency pull-wire switch
- Ex certified component

At 5 m distance intermediate wire supports are required. One wire thimble is provided. Details related to pre-stress and actuating forces see chapter accessories in the appendix.

Ex emergency pull-wire switches, one-side actuation
// Series Ex ZS 73, variants

Features/Options
- Indicator lamps for zone 22 for 24VDC are indicated at the end of this chapter
- Indicator lamp position in the left side cable entry, other positions possible on request
- Collar W to protect against the entry of foreign bodies
- Ex ZS 73 NIRO: pull-wire unit and screws made of stainless steel 1.4305, hard-coated enclosure with enamel finish

Features/Options
- With 2 cable entries available on request for zone 22
- Ex emergency pull-wire switches are also available without mechanical latching
- Version for equipment category 3D, dust Ex zone 22 is equipped with a wiring compartment

// Watertight collar W

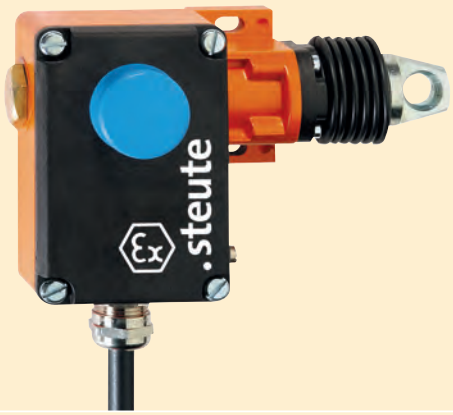

// Watertight collar W

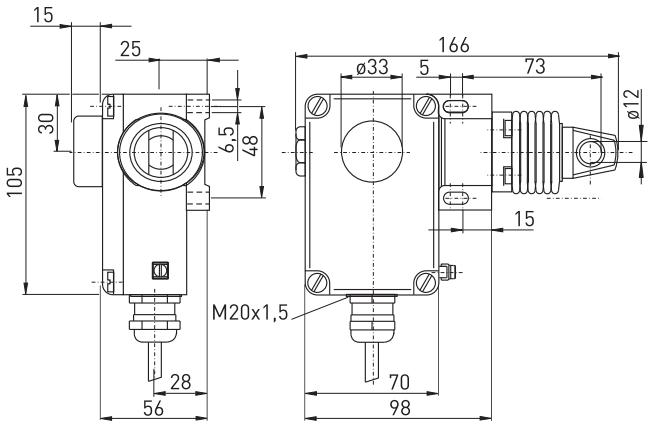

// Ex ZS 73 NIRO

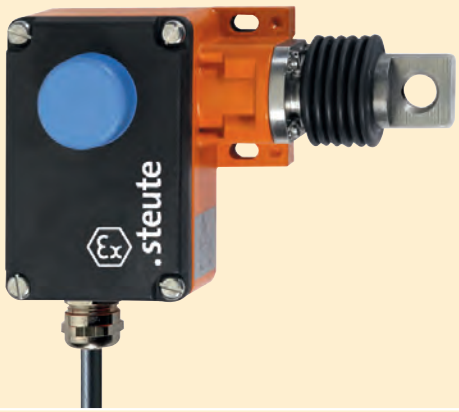

// Ex ZS 73 NIRO

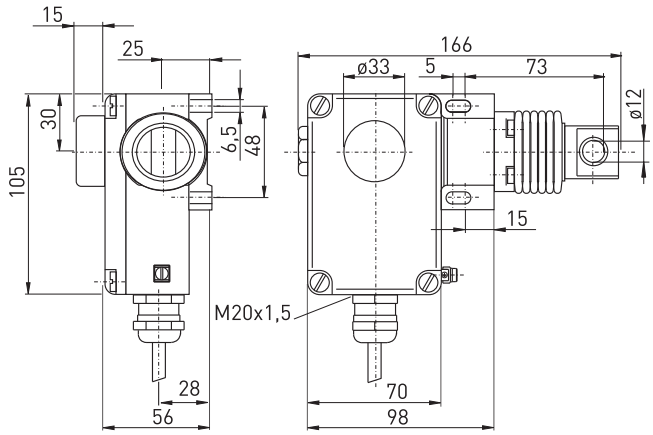

// Key release VS

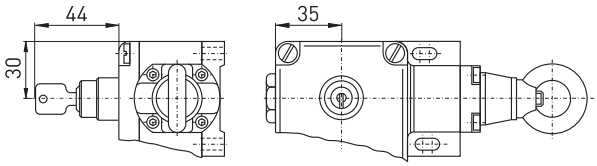

Ex emergency pull-wire switches, one-side actuation
// Series Ex ZS 75

Features/Options
- Ex zone 1 and 21
- 2 or 4 contacts
- Wire length up to 50 m
- 4 various spring force variants (actuating forces), adjustable actuating force: 295-390 N for 30-50 m, 195-275 N for 20-30 m, 120-180 N for 10-20 m, 80-100 N for max. 10 m
- Wire pull and breakage detection
- Special version only for dust Ex zone 22

// EX ZS 75

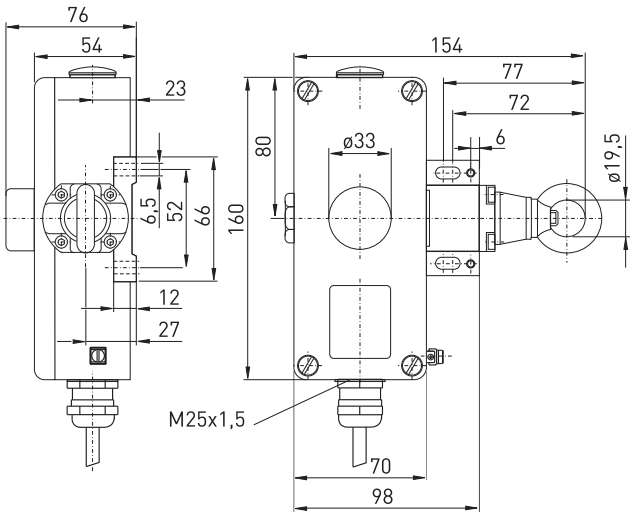

Technical data

Standards	EN 60947-5-1, -5; EN 60079-0, EN 60079-1, EN 60079-31; EN ISO 13849-1
Enclosure	aluminium die casting, enamel finish
Cover	aluminium die casting, enamel finish
Switch insert	Ex 14
Degree of protection	Ex ZS 75 WVD: IP 65; Ex ZS 75 VD, Ex ZS 75 VS and Ex ZS 75 WVS: IP 54 to EN 60529
Contact material	silver
Switching system	slow action, positive break NC contacts ⊖
Switching elements	change-over contact with double break or 2 NO/2 NC or 4 NC contacts
Connection	cable H05VV-F, length 3 m
Cable section	4 x 0.75mm² (incl. conductor ferrules) per switch insert
B_{10d} (10 % load)	Ex ZS 75: 2 million Ex ZS 75 VD/VS: 200 000
T_M	max. 20 years
U_{imp}	4 kV
U_i	250 V
I_{the}	T6: 6 A, T5: 3 A
Utilisation category	AC-15, DC-13
I_e/U_e	6 A/250 VAC, 0.25 A/230 VDC
Max. fuse rating	6 A gL/gG D-fuse
Ambient temperat. Ta	T6: –20 °C ... +65 °C; T5: –20 °C ... +95 °C
Mechanical life	Ex ZS 75: > 1 million operations Ex ZS 75 VD/VS: > 100 000 operations
Max. wire length	50 m
Features	wire pull and breakage detection
Ex marking	Ⓔx II 2G Ex d IIC T6/T5 Gb, II 2D Ex tb IIIC T80°C/T95°C Db IECEx Ex d IIC T6/T5 Gb, Ex tb IIIC T80°C/T95°C Db
Approvals	PTB 06 ATEX 1067 X, IECEx PTB 07.0034 X

Contact variants: switch travel/contacts

	Slow action
1 NC/1 NO contact	Ex ZS 75 1Ö/1S 
2 NC/2 NO contact	Ex ZS 75 2Ö/2S 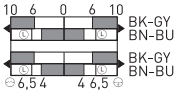
4 NC contacts	Ex ZS 75 4Ö 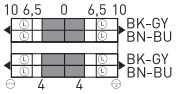

Type code

Ex ZS 75 1Ö/1S WVD/80-100 N-3D

- Ex Zone 22
- Pre-stress force (120-180 N, 195-275 N, 295-390 N)
- VD Push button release (VS key release, blank without mechanical latching)
- W Watertight collar
- 1 NC/1 NO contact (2Ö/2S, 4Ö)
- Series
- Emergency pull-wire switch
- Ex certified component

At 5 m distance intermediate wire supports are required. One wire thimble is provided. Details related to pre-stress and actuating forces see chapter accessories in the appendix.

Ex emergency pull-wire switches, one-side actuation
// Series Ex ZS 75, variants

Features/Options
- Indicator lamps for zone 22 for 24VDC are indicated at the end of this chapter
- Indicator lamp position on the left side, other positions possible on request
- Collar W to protect against the entry of foreign bodies

Features/Options
- Ex emergency pull-wire switches are also available without mechanical latching
- Version for equipment category 3D, dust Ex zone 22 is equipped with a wiring compartment

// Watertight collar W

// Watertight collar W

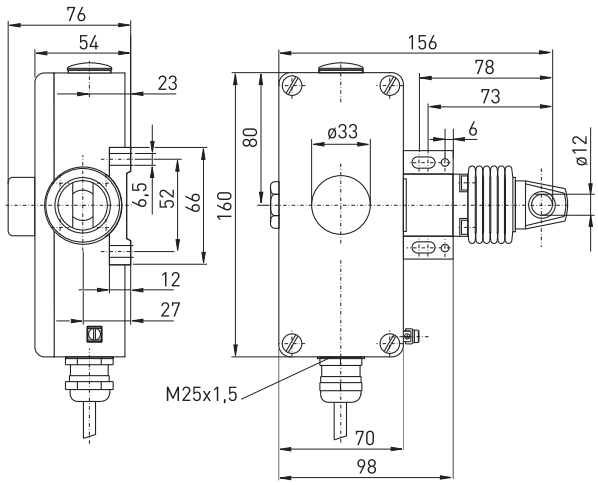

// Key release VS

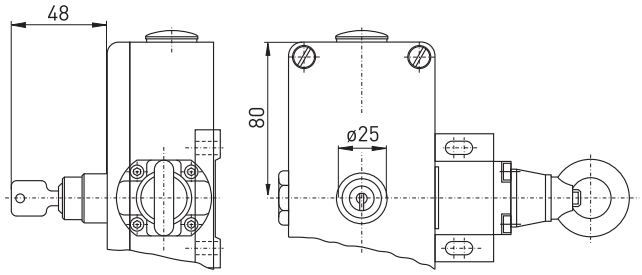

Ex emergency pull-wire switches, one-side actuation
// Series Ex ZS 80

Features/Options
- Ex zone 1 and 21
- 2 contacts
- Position indicator and integrated emergency-stop push button
- Wire length up to 75 m
- Pretensioning force 100 N
- Lever for release and position indication
- Wire pull and breakage detection
- Special version only for dust Ex zone 22

// EX ZS 80

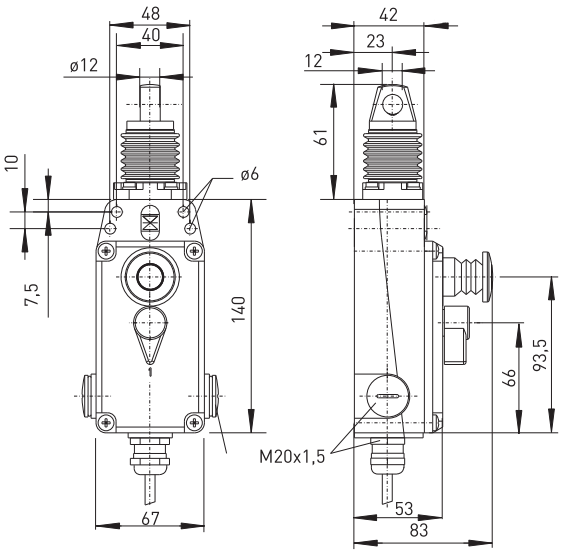

Technical data

Standards	EN 60947-5-1, -5; EN 60079-0, EN 60079-1, EN 60079-31; EN ISO 13849-1
Enclosure	aluminium die casting, enamel finish
Cover	glass-fibre reinforced, shock-proof thermoplastic, ultramid
Switch insert	Ex 14
Degree of protection	IP 67 to EN 60529
Contact material	silver
Switching system	slow action, positive break NC contacts ⊖
Switching elements	1 NC/1 NO contact or 2 NC contacts with double break
Connection	cable H05VV-F, length 3 m
Cable section	4 x 0.75mm² (incl. conductor ferrules)
B_{10d} (10 % load)	200 000
T_M	max. 20 years
U_{imp}	4 kV
U_i	250 V
I_{the}	T6: 6 A, T5: 3 A
Utilisation category	AC-15, DC-13
I_e/U_e	6 A/250 VAC, 0.25 A/230 VDC
Max. fuse rating	6 A gL/gG D-fuse
Ambient temperat. Ta	T6: –20 °C ... +65 °C; T5: –20 °C ... +95 °C
Mechanical life	> 100 000 operations
Max. wire length	75 m
Features	wire pull and breakage detection
Ex marking	Ⓔx II 2G Ex d IIC T6/T5 Gb, II 2D Ex tb IIIC T80°C/T95°C Db IECEx Ex d IIC T6/T5 Gb, Ex tb IIIC T80°C/T95°C Db
Approvals	PTB 06 ATEX 1050 X, IECEx PTB 07.0034 X

Contact variants: switch travel/contacts

	Slow action
1 NC/1 NO contact	**Ex ZS 80 1Ö/1S** 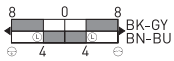
2 NC contacts	**Ex ZS 80 2Ö** 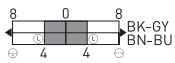

Type code **Ex ZS 80 1Ö/1S WVD-3D**

- dust Ex zone 22
- VD Lever release
- W Watertight collar
- 1 NC/1 NO contact (2Ö)
- Series
- Emergency pull-wire switch
- Ex certified component

At 5 m distance intermediate wire supports are required. One wire thimble is provided. Details related to pre-stress and actuating forces see chapter accessories in the appendix.

IMPACT TEST ON AN EMERGENCY PULL-WIRE SWITCH

Ex emergency pull-wire switches, two-side actuation
// Series Ex ZS 73 S

Features/Options
- Ex zone 1 and 21
- Metal enclosure
- 2 contacts
- Wire length up to 2 x 50 m
- Push button or key release possible
- Wire pull and breakage detection
- Special version only for dust Ex zone 22

// EX ZS 73 S

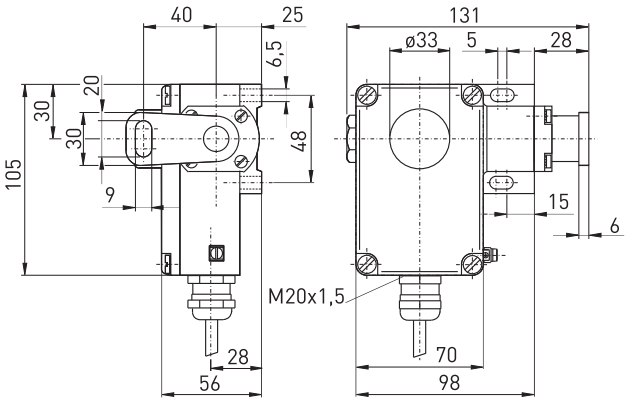

Technical data

Standards	EN 60947-5-1, -5; EN 60079-0, EN 60079-1, EN 60079-31; EN ISO 13849-1
Enclosure	aluminium die casting, enamel finish; Ex ZS 73 NIRO: aluminium die casting, hard-coated and enamelled
Cover	glass-fibre reinforced, shock-proof thermoplastic, ultramid
Switch insert	Ex 14
Degree of protection	Ex ZS 73 S VD: IP 65; Ex ZS 73 S VS: IP 54 to EN 60529
Contact material	silver
Switching system	slow action, positive break NC contacts ⊖
Switching elements	change-over contact with double break or 2 NC contacts
Connection	cable H05VV-F, length 3 m
Cable section	4 x 0.75mm² (incl. conductor ferrules)
B_{10d} (10 % load)	Ex ZS 73 S: 2 million Ex ZS 73 S VD/VS: 200 000
T_M	max. 20 years
U_{imp}	4 kV
U_i	250 V
I_{the}	T6: 6 A, T5: 3 A
Utilisation category	AC-15, DC-13
I_e/U_e	6 A/250 VAC, 0.25 A/230 VDC
Max. fuse rating	6 A gL/gG D-fuse
Ambient temperat. Ta	T6: –20 °C ... +65 °C; T5: –20 °C ... +95 °C
Mechanical life	Ex ZS 73 S: > 1 million operations Ex ZS 73 S VD/VS: > 100 000 operations
Max. wire length	2 x 50 m
Features	wire pull and breakage detection
Ex marking	Ⓔx II 2G Ex d IIC T6/T5 Gb, II 2D Ex tb IIIC T80°C/T95°C Db IECEx Ex d IIC T6/T5 Gb, Ex tb IIIC T80°C/T95°C Db
Approvals	PTB 06 ATEX 1066 X, IECEx PTB 07.0034 X

Contact variants: switch travel/contacts

	Slow action
1 NC/1 NO contact	Ex ZS 73 S 1Ö/1S 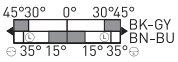
2 NC contacts	Ex ZS 73 S 2Ö 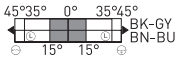

Type code

Ex ZS 73 S 1Ö/1S VD-NIRO-3D

- Dust Ex zone 22
- NIRO Pull-wire unit
- VD Push button release (VS key release, blank without mechanical latching)
- 1 NC/1 NO contact (2Ö)
- S Two-side actuation
- Series
- Emergency pull-wire switch
- Ex certified component

At 4 m distance intermediate wire supports are required. Details related to pre-stress and actuating forces are indicated at the end of this chapter. Two tension springs type RZ156I must be installed. See chapter accessories in the appendix.

Ex emergency pull-wire switches, two-side actuation
// Series Ex ZS 73 S, variants

Features/Options
- Indicator lamps for zone 22 for 24VDC
  are indicated at the end of this chapter
- Indicator lamp position in the left side cable entry,
  other positions possible on request
- Ex ZS 73 NIRO: pull-wire unit and screws made of stainless
  steel 1.4305, hard-coated enclosure with enamel finish

Features/Options
- With 2 cable entries available on request for zone 22
- Version for equipment category 3D, dust Ex zone 22
  is equipped with a wiring compartment

// Ex ZS 73 S NIRO

// Ex ZS 73 S NIRO

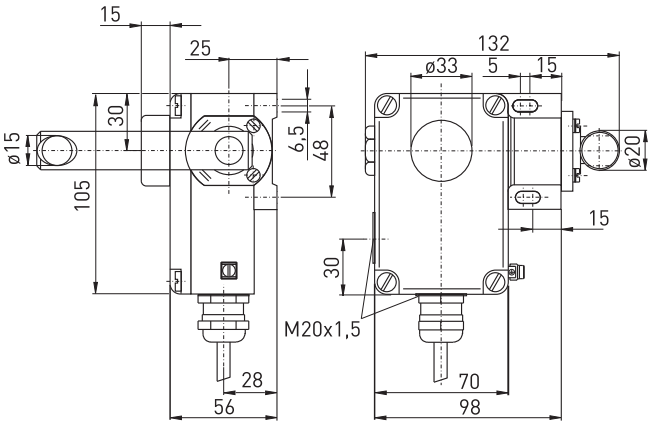

// Key release VS

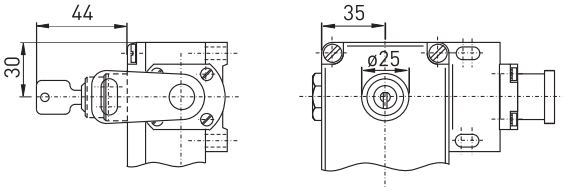

Ex emergency pull-wire switches, two-side actuation
// Series Ex ZS 75 S

Features/Options
- Ex zone 1 and 21
- Metal enclosure
- 2 or 4 contacts
- Wire length up to 2 x 50 m
- Push button or key release possible
- Wire pull and breakage detection
- Special version only for dust Ex zone 22

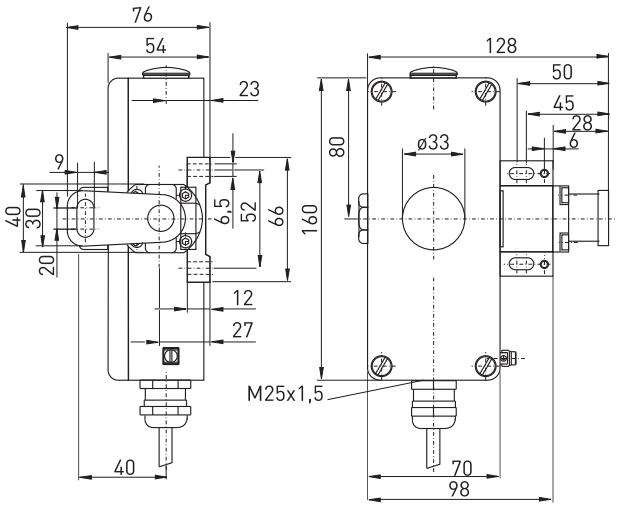

Technical data

Standards	EN 60947-5-1, -5; EN 60079-0, EN 60079-1, EN 60079-31; EN ISO 13849-1
Enclosure	aluminium die casting, enamel finish
Cover	aluminium die casting, enamel finish
Switch insert	Ex 14
Degree of protection	Ex ZS 75 S VD: IP 65; Ex ZS 75 S VS: IP 54 to EN 60529
Contact material	silver
Switching system	slow action, positive break NC contacts ⊖
Switching elements	change-over contact with double break or 2 NO/2 NC or 4 NC contacts
Connection	cable H05VV-F, length 3 m
Cable section	4 x 0.75mm² (incl. conductor ferrules)
B_{10d} (10 % load)	Ex ZS 75 S: 2 million Ex ZS 75 S VD/VS: 200 000
T_M	max. 20 years
U_{imp}	4 kV
U_i	250 V
I_{the}	T6: 6 A, T5: 3 A
Utilisation category	AC-15, DC-13
I_e/U_e	6 A/250 VAC, 0.25 A/230 VDC
Max. fuse rating	6 A gL/gG D-fuse
Ambient temperat. Ta	T6: –20 °C ... +65 °C; T5: –20 °C ... +95 °C
Mechanical life	Ex ZS 75 S: > 1 million operations Ex ZS 75 S VD/VS: > 100 000 operations
Max. wire length	2 x 50 m
Features	wire pull and breakage detection
Ex marking	Ⓔx II 2G Ex d IIC T6/T5 Gb, II 2D Ex tb IIIC T80°C/T95°C Db IECEx Ex d IIC T6/T5 Gb, Ex tb IIIC T80°C/T95°C Db
Approvals	PTB 06 ATEX 1067 X, IECEx PTB 07.0034 X

Contact variants: switch travel/contacts

	Slow action
1 NC/1 NO contact	**Ex ZS 75 S 1Ö/1S**
2 NC/2 NO contact	**Ex ZS 75 S 2Ö/2S**
4 NC contacts	**Ex ZS 75 S 4Ö**

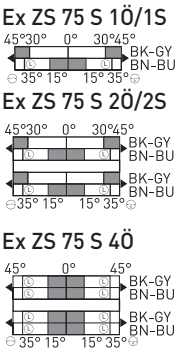

Type code **Ex ZS 75 S 2Ö/2S VD-3D**

- Dust Ex zone 22
- VD Push button release (VS key release, blank without mechanical latching)
- 2 NC/2 NO contacts (1Ö/1S, 4Ö)
- S Two-side actuation
- Series
- Emergency pull-wire switch
- Ex certified component

At 4 m distance intermediate wire supports are required. Details related to pre-stress and actuating forces are indicated at the end of this chapter. Two tension springs type RZ156I must be installed. See chapter accessories in the appendix.

Ex emergency pull-wire switches, two-side actuation
// Series Ex ZS 75 S, variants

Features/Options
- Indicator lamps for zone 22 for 24VDC
  are indicated at the end of this chapter
- Indicator lamp position on the left side, other positions possible
  on request
- Version for equipment category 3D, dust Ex zone 22
  is equipped with a wiring compartment

// Key release VS

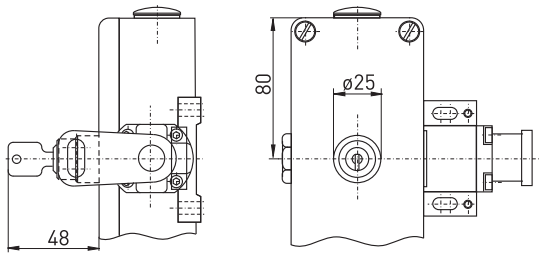

Emergency pull-wire switches, two-side actuation
// Series Ex ZS 90 S

Features/Options
- Ex zone 1 and 21
- Thermoplastic enclosure
- 4 contacts
- Wire length up to 2 x 50 m
- Release by lever possible
- Wire pull and breakage detection

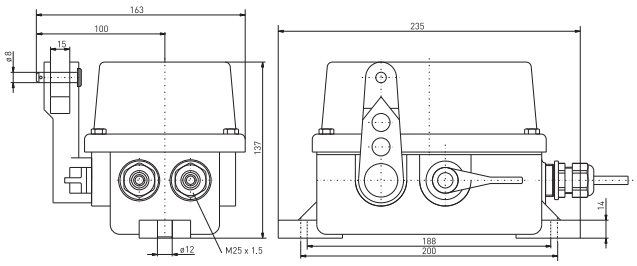

Technical data

Standards	EN 60947-5-1; EN 1088; EN 60079-0, EN 60079-1, EN 60079-31; EN ISO 13849-1
Enclosure	Duroplast
Switch insert	Ex 14
Cover	Duroplast
Protection class	IP 65 to EN 60529
Contact material	silver
Switching elements	2 NO/2 NC contacts with double break
Switching system	slow action, positive break NC contacts ⊖
Connection	cable H05 VV-F, length 3 m
Cable entry	2 x M25 x 1.5
B_{10d} (10% Nennlast)	200 000
T_M	max. 20 years
U_{imp}	4 kV
U_i	250 V
I_{the}	T6: 6 A, T5: 3 A
Utilisation category	AC-15; DC-13
I_e/U_e	6 A/250 VAC, 0.25 A/230 VDC
Max. fuse rating	6 A gG D fuse
Ambient temperat. Ta	T6: –20 °C ... +65 °C; T5: –20 °C ... +95 °C
Mech. life	> 100 000 operations
Max. wire length	2 x 50 m
Features	wire pull and breakage detection
Ex marking	Ⓔx II 2G Ex d IIC T6/T5 Gb, II 2D Ex tb IIIC T80°C/T95°C Db IECEx Ex d IIC T6/T5 Gb, Ex tb IIIC T80°C/T95°C Db
Approvals	PTB 03 ATEX 1070 X*, IECEx PTB 06.0098 X

* referring to the switch insert

Contact variants: switch travel/contacts

	Slow action
2 NC/2 NO contacts	**Ex ZS 90 S 2Ö/2S** 3 4 / 1 2 3 4 / 1 2

Type code **Ex ZS 90 S 2Ö/2S VD**

- VD lever release (blank without manual latching)
- 2 NC/2 NO contacts
- S two-side actuation
- Series
- Emergency pull-wire switch
- Ex certified component

At 4 m distance intermediate wire supports are required. Details related to pre-stress and actuating forces are indicated at the end of this chapter. Two tension springs type RZ 130K must be installed see chapter accessories in the appendix.

MOUNTING OF THE PULL-WIRE UNIT AT EMERGENCY PULL-WIRE SWITCHES

Notes
- Always mount emergency pull-wire switch in middle position.
- Two tension springs type RZ156I must be installed. See chapter accessories in the appendix

// One-side actuation

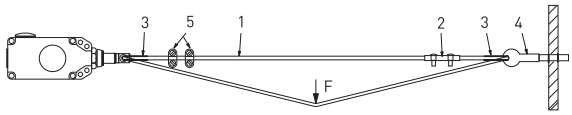

1 = Pull-wire
2 = DUPLEX wire clamp
3 = Wire thimble
4 = Eye bolt
5 = Wire clamp

// Two-side actuation

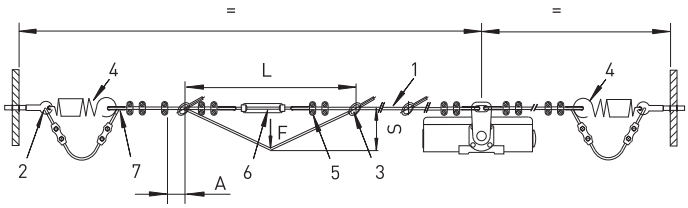

1 = Pull-wire
2 = Eye bolt
3 = Wire support
4 = Tension spring
5 = Wire clamp
6 = Tensioner
7 = Wire thimble
A = Travel limit 70 mm
L = Maximum wire length between wire supports
S = Switching/actuating travel
e.g. max. 400 mm at L = 4 m

Notes
- With two-side actuation a travel limitation must be installed, see drawing below, in order to prevent overstretching of the tension spring.
- Before mounting the pull-wire, the red PVC sheath must be removed from the the pull-wire in the clamping range of the pull-wire!
- In order to guarantee safe operation, observe the enclosed mounting and wiring instructions.

Notes
- After fitting the wire, pull on it strongly several times as the pull-wire and the wire thimble will deform.
- Subsequently, retense the wire using the DUPLEX wire clamp, eye-bolt or tensioner.

// Spring pre-tension / Travel limitation

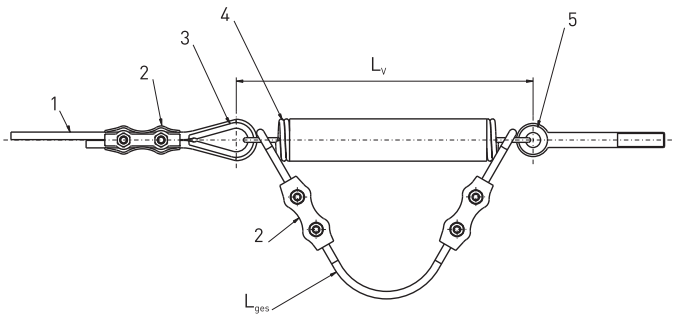

// Wire thimble deformation

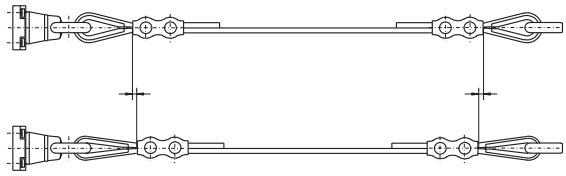

1 = Pull-wire
2 = DUPLEX wire clamp
3 = Wire thimble
4 = Tension spring
5 = Eye bolt

L_{ges} = Total length for limitation of spring 270 mm
L_V = Pre-stress 200 mm
Both values refer to tension spring RZ156I

Ex emergency pull-wire switches
// Pre-stress and actuating forces

Notes
- The values are indicated for an ambient temperature of 20 °C.
- The linear expansion of the wire due to strain and deformation of the wire thimble is not considered.
- The actuating forces are only approximate values, due to the spring forces being subject to tolerances.

Emergency pull-wire switch	Wire length betw. supports x [m]	Pre-stress force [N]	Actuating travel s [cm]	Actuating force F [N]	Recommended wire length [m]	Ordering index
Ex **ZS 71**	3	200 55	7 7	30 6	5-20 <5	/200N /55N
Ex ZS 73	5	295-390 195-275 120-180	13 13 13	38-60 33-41 19-25	30-50 20-30 10-20	/295-390N /195-275N /120-180N
Ex ZS 75	5	295-390 195-275 120-180	13 13 13	38-60 33-41 19-25	30-50 20-30 10-20	/295-390N /195-275N /120-180N
Ex ZS 80	5	100	22	32	75	–

Actuating forces and travel between supports

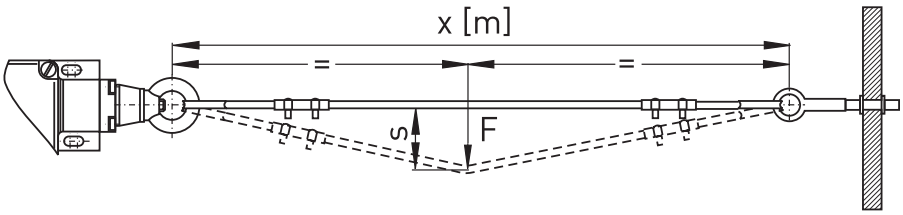

PRODUCTION PROCESS ASSEMBLY

EMERGENCY PULL-WIRE SWITCH AFTER FINAL QUALITY CHECK

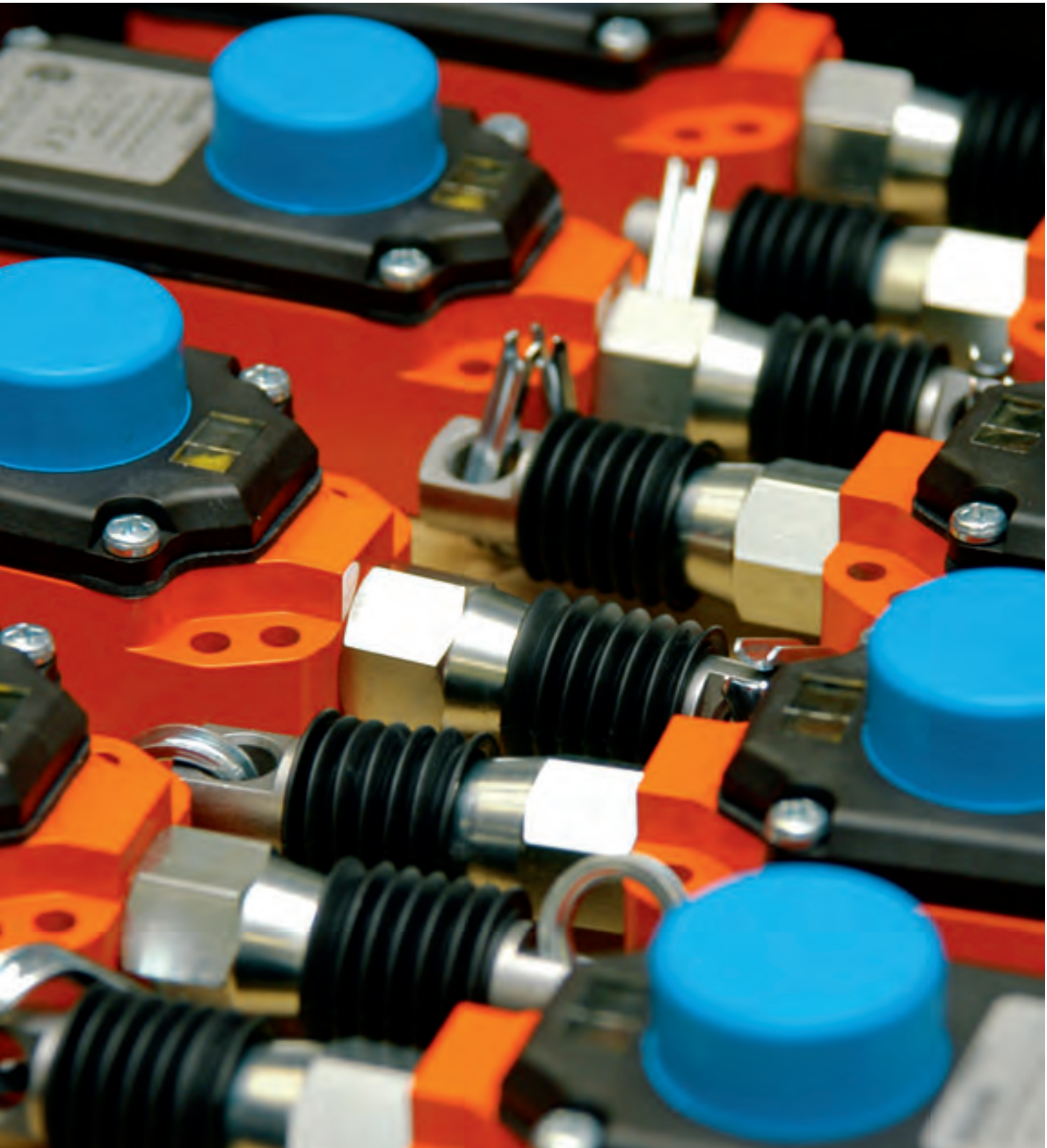

Features/Options
- To guide the pull-wire where the path is not a straight line
- For pull-wire with red PVC sheath Ø 5 mm (steel core Ø 3 mm)
- Ordering unit: 1 piece

Notes
According to EN 418, pulleys may only be mounted such that the complete length of the pull-wire can be observed.

Features/Options
- Steel core Ø 3 mm with red PVC sheath
- Total diameter 5 mm
- Ordering unit: per metre
- Available with stainless steel core

- Complete pull-wire set consisting of:
  5 m pull-wire Ø 3 mm with 2 mm PVC sheath,
  2 wire clamps DIN 741, 1 wire thimble DIN 6899,
  1 eye bolt DIN 444 and 1 Duplex wire clamp

// Pulley

// Pull-wire

// Pulley

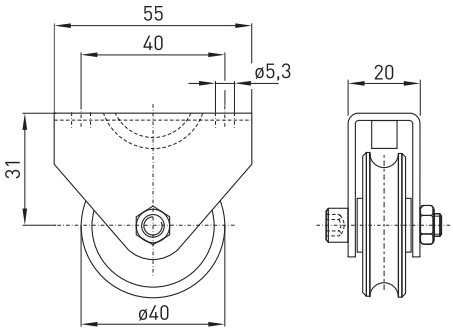

// Pull-wire

Ordering details

Pulley	04.73.9102

Ordering details

Pull-wire Ø 5 mm per metre	01.09.0011
Pull-wire stainless steel Ø 5 mm per metre	01.10.0059
Complete pull-wire set, 5 m (other lengths on request)	04.61.7101

Features/Options
- Pull-wire yellow (polypropylene)
- With rubber ball and mounting clamp
- 1, 2, 3 or 4 m long
- Ordering unit: 1 piece

// Pull-wire

Ordering details

Pull-wire with ball 1 m	04.73.7101
Pull-wire with ball 2 m	04.73.7103
Pull-wire with ball 3 m	04.73.7104
Pull-wire with ball 4 m	04.73.7102

Features/Options
- For pull-wire with steel core Ø 3 mm
- Ordering unit: 1 piece
- Wire clamp made of stainless steel available

// Wire clamp

// Duplex wire clamp

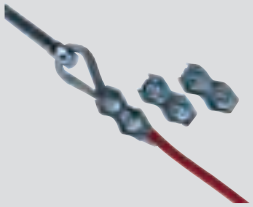

Ordering details

Wire clamp 3 mm	01.10.0003
Wire clamp 3 mm stainless steel	01.10.0061
Duplex wire clamp	01.10.0004

Features/Options
- For pull-wire with steel core Ø 3 mm
- Ordering unit: 1 piece

// Oval-shaped wire clamp

Ordering details

Oval-shaped wire clamp 3 mm	01.10.0091

Features/Options
- Per DIN 6899
- For pull-wire with steel core Ø 3 mm, part number wire thimble 3B
- Wire clamp made of stainless steel available
- Ordering unit: 1 piece

// Wire thimble 3B

Ordering details

Wire thimble 3B	01.10.0001
Wire thimble stainless steel	01.10.0084

Features/Options
- Per DIN 444
- Eye bolt BM8 x 70 including nut:
  70 mm length referring to eye centre,
  M8 thread, 25 mm thread length
- BM8 x 70 made of stainless steel available
- Eye bolt BM10 x 40 including nut (without figure):
  40 mm length referring to eye centre,
  M10 thread, 25 mm thread length
- Ordering unit: 1 piece

// Eye bolt BM8 x 70

Ordering details

Eye bolt BM8x70 with nut	04.00.7112
Eye bolt BM8x70 stainless steel	01.03.0210
Eye bolt BM10x40 with nut	01.03.0208

Features/Options
- For precise adjustment of pull-wire pre-stress
- Per DIN 1480
- Tensioner M6: adjustable von 145 mm bis 225 mm
- Tensioner M8 (without figure):
  made of stainless steel, adjustable from 160 mm to 255 mm
- Ordering unit: 1 piece

// Tensioner M6

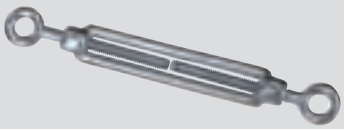

Ordering details

Tensioner M6	01.10.0010
Tensioner M8 stainless steel	01.10.0062

Features/Options
- Only suitable for two-side actuation, emergency pull-wire switches series ZS 73 S and ZS 75 S
- To maintain reaction force
- Length in unstretched state 130 mm
- Ordering unit: 1 piece

// Tension spring RZ-156I

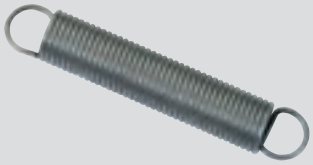

Ordering details

Tension spring RZ-156I	01.07.0070

Features/Options
- Only suitable for application in zone 2 and 22
- Lamp cap red, green or yellow
- M20 x 1.5
- 24 VDC
- Ordering unit: 1 piece

// Ex indicator Multi-LED couloured

// Ex indicator Multi-LED couloured

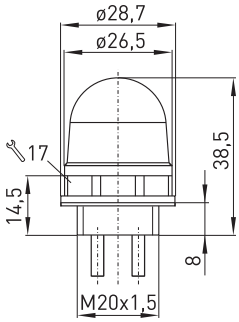

Ordering details

Ex indicator lamp Multi-LED RD 24 VDC	04.00.7122
Ex indicator lamp Multi-LED GN 24 VDC	04.00.7123
Ex indicator lamp Multi-LED YE 24 VDC	04.00.7124

Features/Options
- Only suitable for application in zone 2 and 22
- Lamp cap white
- M20 x 1.5
- 24 VDC
- Ordering unit: 1 piece

// Ex indicator lamp Multi-LED white

// Ex indicator lamp Multi-LED white

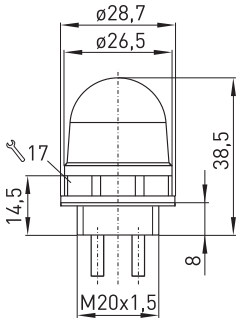

Ordering details

Ex indicator lamp Multi-LED WH 24 VDC	04.00.7125

Ex 14 RUV

Thermoplastic enclosure

// Series Ex 14
from page 186
// Series BF 80
from page 192

Ex command devices

Range of application

Ex command devices are mounted in switchboards, control panels, two-hand control panels and in the lift industry. On manual actuation, the devices start or terminate operating sequences and functional processes.

There are versions as push buttons, semi-rotary, key-operated and emergency stop switches. The emergency stop devices are wired in the safety circuit of machinery or plants. They fulfil the requirements of EN 60204-1.

Design and operating principle

The Ex command devices are fit for ∅ 22.5 mm mounting holes and suitable for spacings of 30 mm between centres. All Ex command devices provide IP 65 degree of protection and are double insulated for class II. The actuator is connected to the Ex 14 switch by a bayonet fastener. Available switching elements with slow action are: emergency-stop push-buttons, push-buttons with and without diaphragm, selectors, control switches and key-operated switches.

All Ex command devices shown in this chapter bear the CE mark according to the Low Voltage Directive 06/95/EC and the emergency-stop push-buttons according to the Machinery Directive 2006/42/EC, as well as to ATEX 94/9/EC. The Ex command devices per equipment category 3D bear the CE mark without the number of the notified body and have received a CE declaration of manufacturer conformity.

Application

as emergency-stop push button in a switchboard

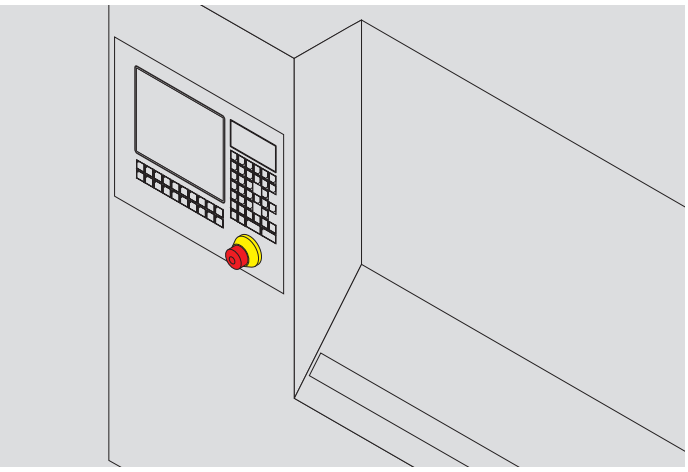

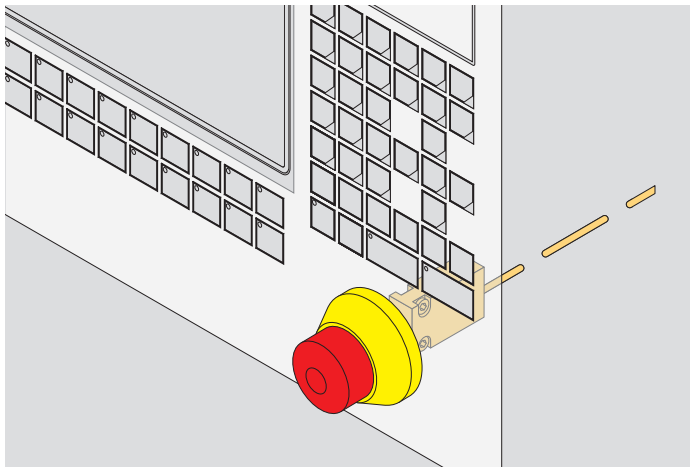

Features/Options
- Ex zone 1 and 21
- Double insulated ⧈
- Slow action ⊖, change-over contact or 2 NC contacts with double break
- Overlapping contacts available
- Mounting hole diameter 22.5 mm
- With pre-wired cable, cable length 1 metre
- Special version only for dust Ex zone 22

// EX 14

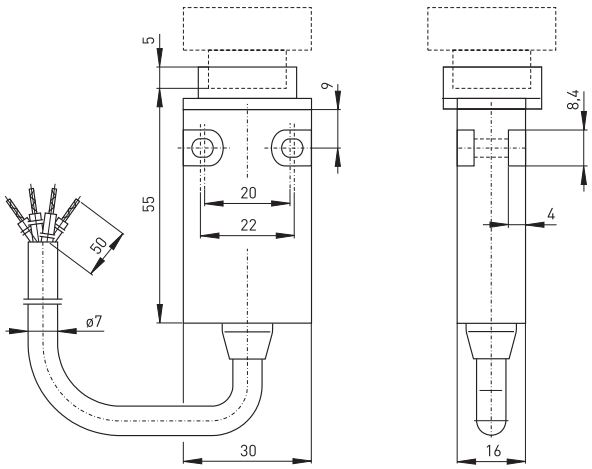

Technical data

Standards	EN 60947-5-1; EN 1088; EN 60079-0, EN 60079-1, EN 60079-31; EN ISO 13849-1
Enclosure	glass-fibre reinforced, shock-proof thermoplastic, self-extinguishing UL 94-V0
Degree of protection	IP 65 according to EN 60529
Contact material	silver
Switching system	slow action, positive break NC contact ⊖
Switching elements	change-over contact with double break Zb, galvanically separated contact bridges
Connection	cable H05VV-F
Cable section	4 x 0.75mm²
Cable length	1 m
B_{10d} (10 % load)	60 000
T_M	max. 20 years
U_{imp}	4 kV
U_i	250 V
I_{the}	T6: 6 A; T5: 3 A
I_e/U_e	6 A/250 VAC; 0,25 A/230 VDC
Utilisation category	AC-15, DC-13
Max. fuse rating	6 A gL/gG D-fuse
Ambient temperat. Ta	T6: –20 °C ... +65 °C, T5:–20 °C ... +95 °C
Mechanical life	> 30 000 operations
Switching frequency	1800/h
Note	Switch must be protected from mechanical damage!
Ex marking	Ⓔx II 2G Ex d IIC T6/T5 Gb, II 2D Ex tb IIIC T80°C/T95°C Db IECEx Ex d IIC T6/T5 Gb, Ex tb IIIC T80°C/T95°C Db
Approvals	PTB 03 ATEX 1070 X, IECEx PTB 06.0098 X

Type code	Ex 14 RUV 1Ö/1S-s-1m-3D

- Equipment Categ. 3D, dust Ex zone 22
- Cable length 1 m, (2 m, 5 m, 10 m)
- Cable entry on side
- Contact type 1Ö/1S (2Ö only for RUV)
- Actuator RUV (RT, RSSA, RW, etc. ...)
- Series
- Ex certified component

Ex command devices
// Series Ex 14, Actuator

Features/Options
- Slow action with 2 NC contacts available
- With gold-plated contacts available on request
- With actuator made of stainless steel, ordering suffix -V2A
- Available with stainless steel actuators: push buttons, semi-rotary, key-operated or key-operated switches

Features/Options
- With pre-wired cable, cable length 1 meter
- Degree of protection IP 65

// Cable on side

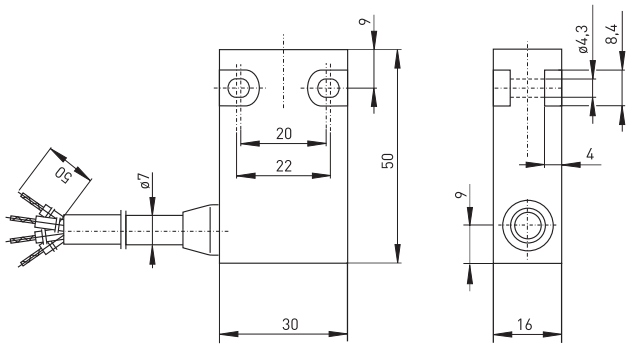

// Push button RT

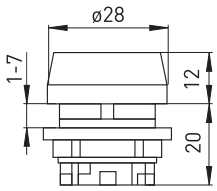

// Ex 14 RT-V2A

Contact variants: switch travel/contacts

	Slow action
1 NC/1 NO contact	Ex 14 RT 

// Ex 14 RST-V2A

Features/Options
- Diaphragm of transparent silicon material
- IP 67 for actuators with diaphragm
- With pre-wired cable, cable length 1 metre
- Available with actuator made of stainless steel

// Push button with diaphragm RTM

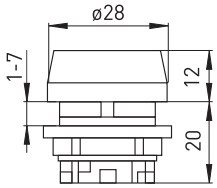

Contact variants: switch travel/contacts

	Slow action
1 NC/1 NO contact	Ex 14 RTM 0 I BK-GY BN-BU

Features/Options
- Selector with rest positions
- Available in 3 different versions
- Degree of protection IP 65
- With pre-wired cable, cable length 1 metre
- Available with actuator made of stainless steel

// Selector RW

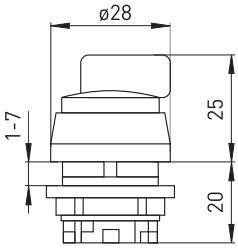

Contact variants: switch travel/contacts

	Slow action
1 NC/1 NO contact	Ex 14 RW ... BK GY BU BN
2 switching positions Switching angle 90° 0 - I or I - II	Ex 14 RWA 0 - I Ex 14 RWA I - II 0 I BK-GY BN-BU I II BK-GY BN-BU
3 switching positions Switching angle –45° + 45° I - 0 - II	Ex 14 RWB I - 0 - II I 0 II BK-GY BN-BU
Control switch actuated selector Left-hand side switching, right-hand side stroke Switching angle –45° + 45° I - 0 ← II	Ex 14 RWC I - 0 ◄H I 0 II BK-GY BN-BU

Features/Options
- RST with spring return
- Available in 2 different versions
- Degree of protection IP 65
- With pre-wired cable, cable length 1 metre
- Available with actuator made of stainless steel

// Control switch RST

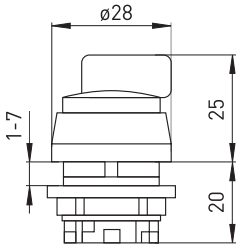

Contact variants: switch travel/contacts

	Slow action
1 NC/1 NO contact	Ex 14 RST ... 
Switching angle 90° with return to left position, 0 ← I	Ex 14 RSTA 0 ← I  
Switching angle –45° + 45° with return to central position I → 0 ← II	Ex 14 RSTB I → 0 ← II  

Legend

Switching position
Spring return
Position for key removal

Features/Options
- RSSA key switch with safety cylinder lock (locks against turning)
- Normal version always has same key number
- Available in 9 different versions
- Up to 20 lock combinations available on request
- Degree of protection IP 65
- With pre-wired cable, cable length 1 metre
- Available with actuator made of stainless steel

// Key switch RSSA

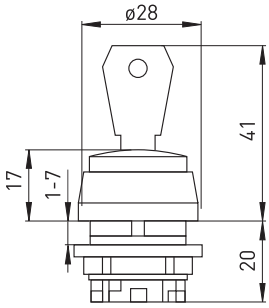

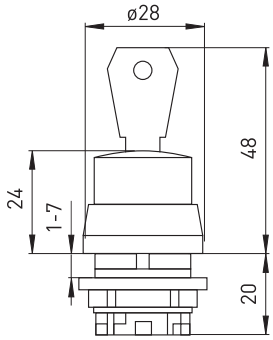

Contact variants: switch travel/contacts

Slow action	2 Schaltstellungen	3 Schaltstellungen
1 NC/1 NO contact	Ex 14 RSSA ... 	
Key switch	Ex 14 RSSA 14 	Ex 14 RSSA 12 
	Ex 14 RSSA 15 	Ex 14 RSSA 13 
	Ex 14 RSSA 17 	Ex 14 RSSA 23 
	Ex 14 RSSA 18 	Ex 14 RSSA 24 
	Ex 14 RSSA 27 	

Ex command devices
// Series Ex 14, Actuator

Features/Options
- Thermoplastic actuator
- Degree of protection IP 65
- With pre-wired cable, cable length 1 metre
- 1 NC and 1 NO contact, double break, type Zb or 2 NC contacts

Features/Options
- Thermoplastic actuator
- according to EN 418
- 1 NC and 1 NO contact, double break, type Zb or 2 NC contacts
- Projection from front of panel 41 mm
- With collar to prevent blocking
- Reset by turning clockwise
- With pressure-point to protect against unintentional actuation
- Degree of protection IP 65
- With pre-wired cable, cable length 1 metre

// Push button RS SW

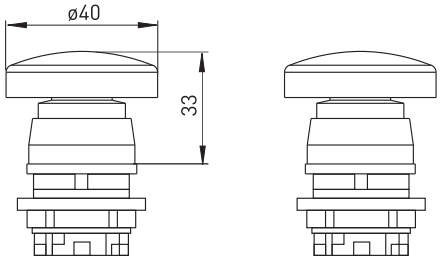

Contact variants: switch travel/contacts

	Slow action
1 NC/1 NO contact	**Ex 14 RS SW** BK GY BU BN
2 NC contacts	**Ex 14 RS SW 2Ö** BK GY BU BN

// Emergency-stop push button RUV

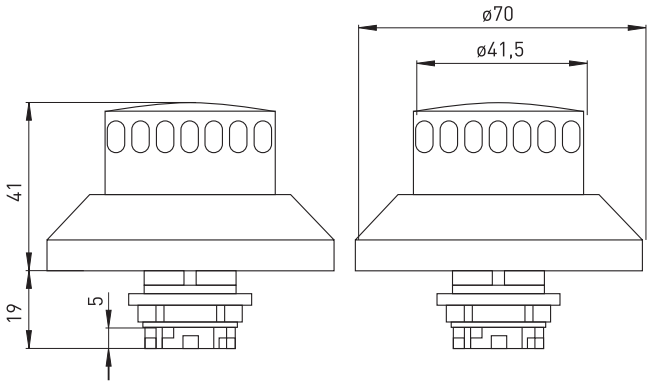

Contact variants: switch travel/contacts

	Slow action
1 NC/1 NO contact	**Ex 14 RUV** BK GY BU BN
2 NC contacts	**Ex 14 RS RUV 2Ö** BK GY BU BN

Features/options
- Ex zone 1 and 2, as well as 21 and 22
- Polyester resin enclosure
- PU foam gaskets
- Different actuating elements like push-buttons, selector- or key switches available
- Versions with two or three actuating elements available
- 3 enclosure sizes

// EX BF 80

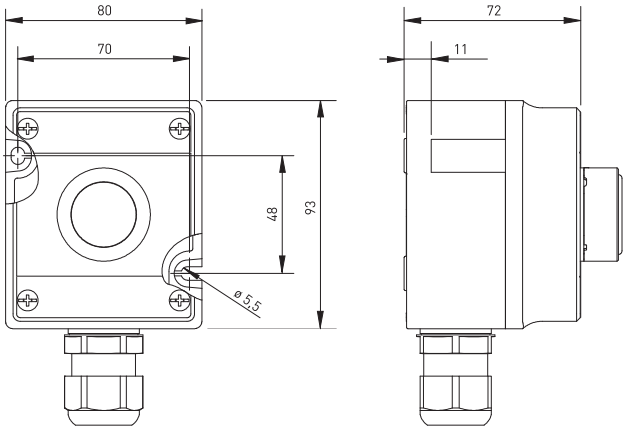

Technical Data

Standards	EN 60079-0, EN 60079-1, EN 60079-5, EN 60079-7, EN 60079-11, EN 60079-18; EN 61241-0, EN 61241-1; EN ISO 13849-1
Enclosure	Polyester resin (glass fibre-reinforced)
Protection class	IP 66 per EN 60529
Switching system	slow action, positive break NC contacts
Connection	screw terminals, max. 2.5 mm² (incl. conductor ferrules), serial/connection clamps max. 4 mm²
Ambient temperat. Ta	- 20 °C...+ 40 °C, - 50 °C...+ 60 °C on request
B_{10d} (10 % load)	6050
T_M	max. 20 years
Contact element	
Ie/Ue	23 A/max. 500 V
Utilisation category	AC-15; DC-13
Rated operating current/voltage	6 A/400 VAC; 6 A/110 VDC
Ambient temperat. Ta	T6: max. +40 °C, T5: max. +55 °C, T4: max. +60 °C
Mechanical life	50 000 operations
Signalling device LM	
Ie/Ue	max. 16 A/750 V
Power consumption	max. 1,5 W
Ambient temperat. Ta	Ex e: T6 -20 °C ... +55 °C, Ex i: T4 -20 °C ... +60 °C
Ex marking	Ⓔx II 2G Ex edqm ia/ib [ia/ib] II, IIA, IIB, IIC, T6/T5/T4 II 2D Ex tD A21 IP65 T80°C, T95°C, T130°C
Approvals	PTB 10 ATEX 1018, IECEx in 2011

Type code	Ex BF 80 3 DT/DT/DT

Actuator RT (push-buttons, selector- or key switches)
3 enclosure (1=single, 2=double, 3=triple
Series
Command device
Ex certified component

Ex Command devices
// Series Ex BF 80, actuators

Features/Options

- Three different sizes of enclosures available for 1, 2, or 3 actuators

Emergency-stop push-button PZTNA
- With 1 NC/1 NO contact or 2 NC/1NO contacts

Key switch SLS
- Two version available: Ex BF 80 1 SLS 0 – I and Ex BF 80 1 SLS I – 0 – II

// 2 Push-buttons

// 2 Push-buttons

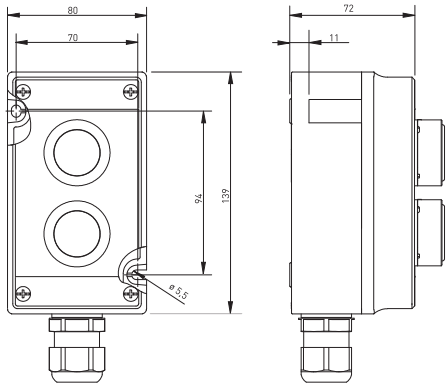

// 3 Push-buttons

// 3 Push-buttons

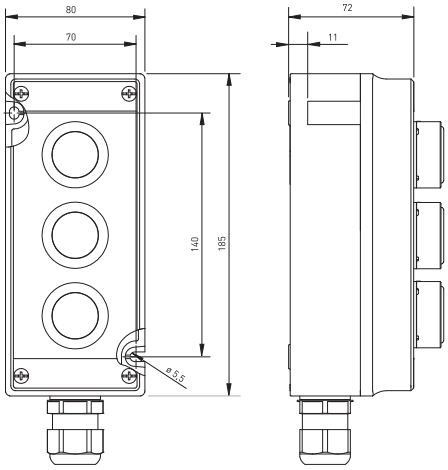

// Emergency-stop push-button PZTNA

// Emergency-stop push-button PZTNA

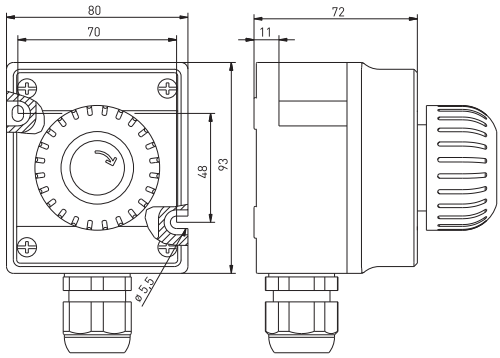

Ex Command devices
// Series Ex BF 80, actuators

Features/Options

Push-button DT/DDT/LDT
- Available with push-button DT, twin push-button DDT or illuminated push-button LDT
- Push-button DT and DDT can be equipped with the provided red O plate or green I plate

Push-button PZDTSW
- Black mushroom push-button

Signalling device LM
- All colour filters included: clear, red, yellow, green, blue

Selector switch WS
- Two switching positions 0 and I

Key switch SLS
- two versions available: Ex BF 80 1 SLS 0 – I and Ex BF 80 1 SLS I – 0 – II

// Push-button DT

// Illuminated push-button LDT

// Signalling device LM

// Selector switch WS

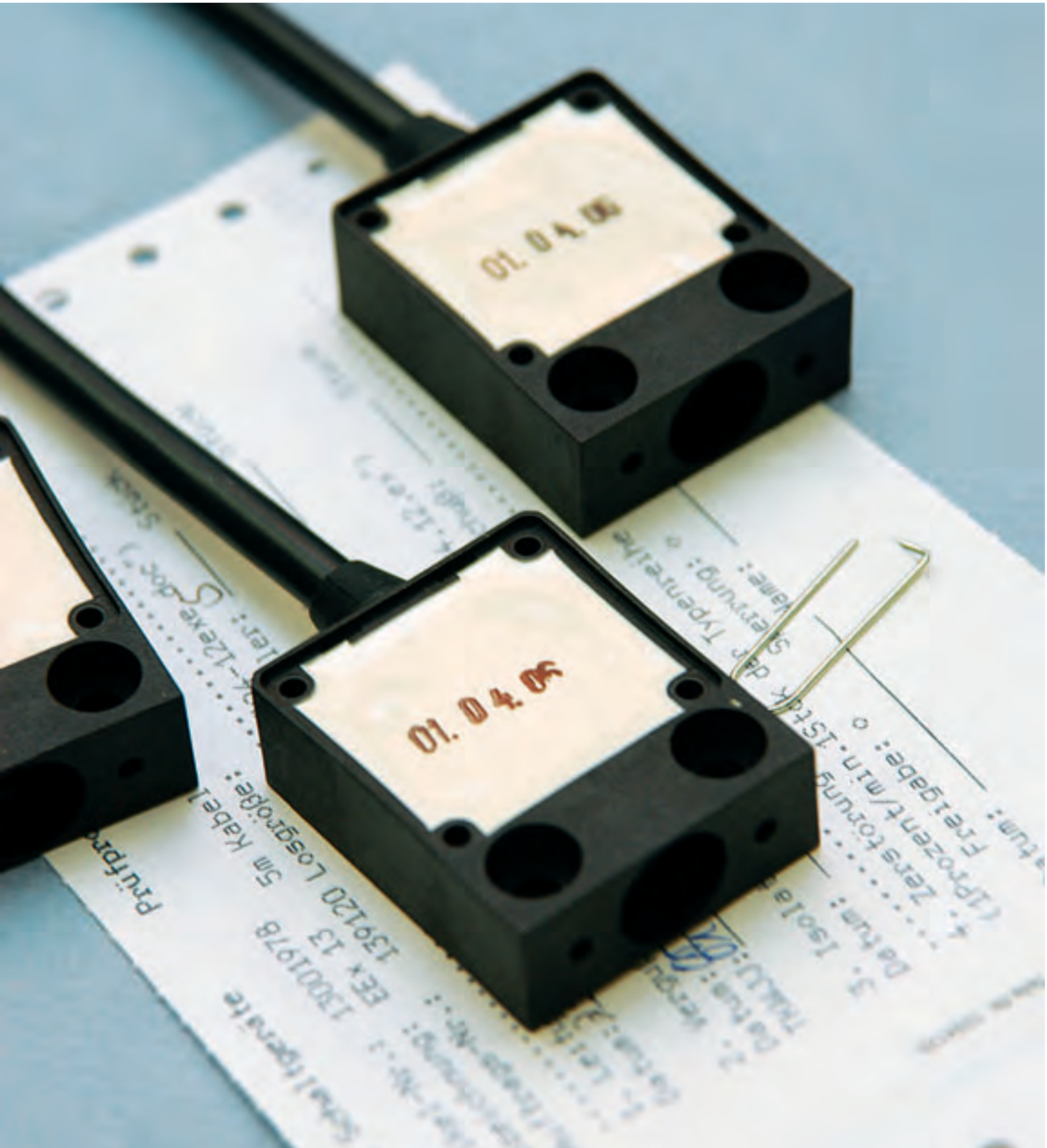
01. 04. 06
01. 04. 06

Ex position switches

Ex 61 WHK

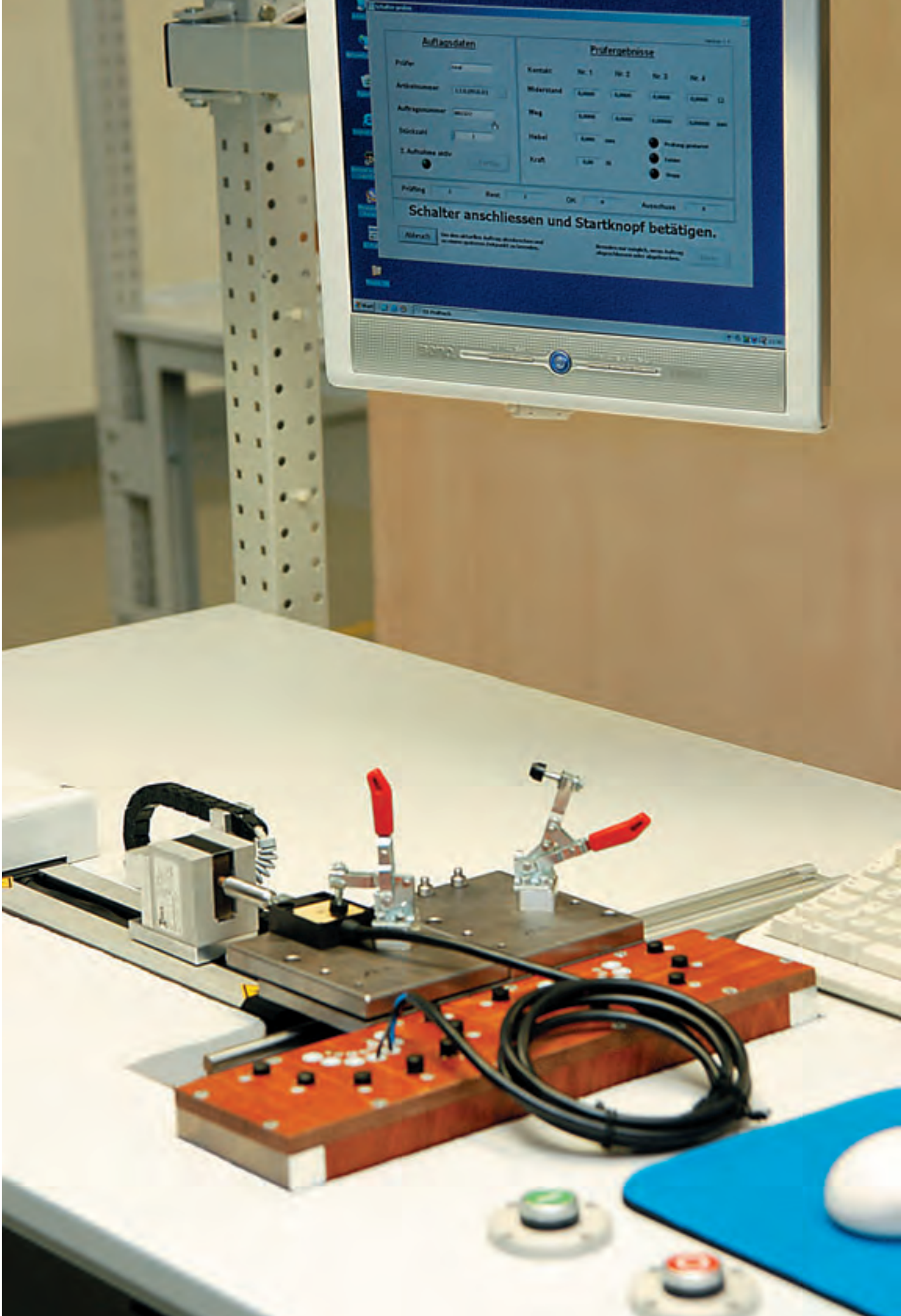
Auftragsdaten
Prüfergebnisse
Schalter anschliessen und Startknopf betätigen.

Ex position switches

Range of application

Ex position switches are used where moving parts of machines and industrial plants have to be positioned, controlled and monitored.

The various application fields, ranging from fine mechanics to heavy-duty machinery, require different materials, electrical capacity and quality criteria regarding construction and design.

Design and operating principle

Many of the Ex position switches fulfil the requirements of the IEC 60947-5-1 standard and can therefore also be used as Ex position switches with safety function. These products are identified by the symbol ⊖ for positive break. Some position switches fulfil the requirements for standardised switches to DIN EN 50 047 or DIN EN 50 041.

The position switches are available with snap and slow action and are available with different contact configurations. A wide range of actuators completes the program. Most of the switches can be supplied with a metal roller on request.

The devices are listed in the order of enclosure dimensions and materials, starting with the smallest and the plastic enclosures.

All Ex position switches shown in this chapter bear the CE mark acccording to the Low Voltage Directive 06/95/EC and to ATEX 94/9/EC. The Ex position switches per equipment category 3D bear the CE mark without the number of the notified body and have received a CE declaration of manufacturer conformity.

Application

Position monitoring on a conveyor belt

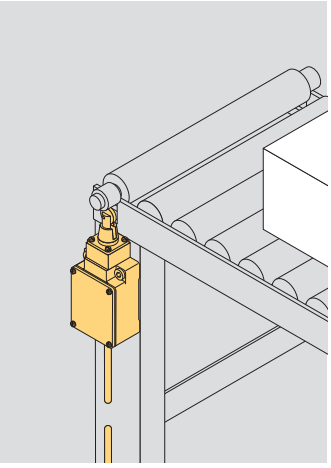

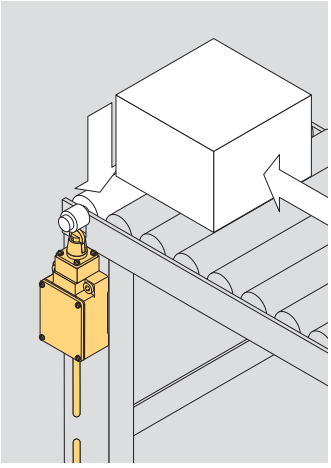

As a piece counter

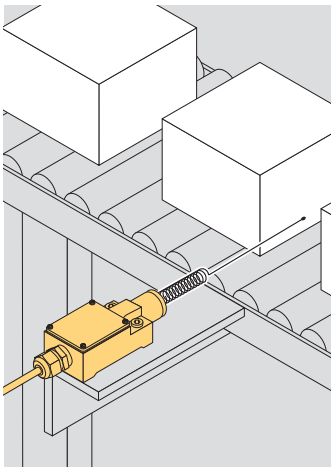

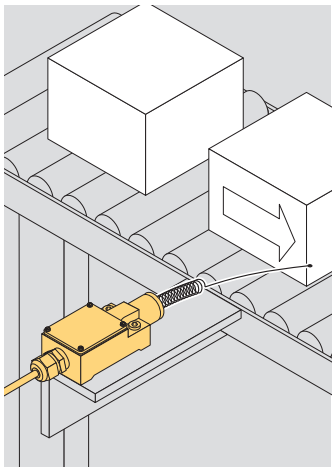

Contacts per IEC 60617

Type C

Change-over contact with single break with 3 terminals

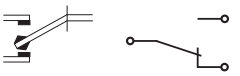

Type Za

Change-over contact with double break with 4 terminals. The contacts have the same polarity.

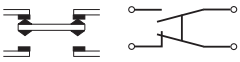

Type Zb

Change-over contact with double break with 4 terminals. The two movable contacts are electrically insulated from each other.

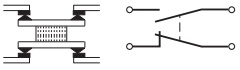

Legend

α: Actuating angle from bottom of switch axis as shown in picture

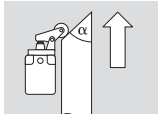

α: Actuating angle from right of switch axis

β: Actuating angle from left of switch axis as shown in picture

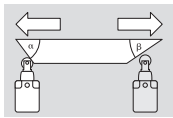

Selection table
Ex position switches

// Series		// Actuator								
										
Ex 13, from page 164 - Thermoplastic enclosure - Cable IECEx	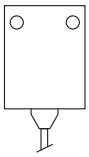	+ W	F	KU WKU	FKU		R WR		FR	
Ex/ExM 14, from page 176 - Thermoplastic enclosure - Cable IECEx	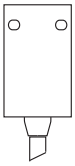	+ W	F	KU WKU	FKU	VKU	R WR		FR	
Ex/ExM 95, from page 186 - Thermoplastic enclosure - Wiring compartment - 1 cable entry - Design to DIN EN 50 047	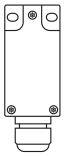	W					R	RL		
Ex T 356, from page 196 - Thermoplastic enclosure with metal cover - Cable IECEx	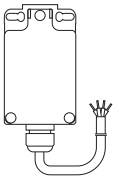	S					R			
Ex 12, from page 200 - Metal enclosure - Cable	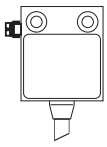	+ W	F	KU WKU	FKU		R WR		FR	
Ex 335, from page 212 - Metal enclosure - Wiring compartment - 1 cable entry IECEx	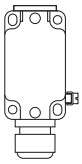	S					R			
Ex 355, from page 218 - Metal enclosure - Wiring compartment - 3 cable entries IECEx	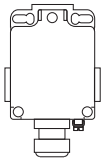	S					R			
Ex /ExM 61, from page 224 - Metal enclosure - Cable		W								

+ Standard: plunger without water-tight collar

Actuating direction ↓ / Free movement of actuator →

← →	← →	← →	↑	← →	← →	← →	← →	← →	← →	← →	↻	↻	↻
	WH	WHL	WPH	WHK	D	DL	DS			DD	TL	TF	TK
VR					D	DL	DS				TL	TF	TK
	WH WHM	WHLM	WPH WPHM 4K	WHKM	D		DS		DF	DD	TL		TK
					4VH		4V7H			4V10H			
	WH	WHL	WPH	WHK	D	DL	DS			DD	TL	TF	TK
	1K		3K		4VH	4V3H	4V7H	3V4D		4V10H			TK
	1K		3K		4VH	4V3H	4V7H	3V4D		4V10H			TK
	WH	WHL	WPH	WHK	D	DL	DS				TL	TF TFL	TK

Features/Options
- Ex zone 1 and 21
- Thermoplastic enclosure
- Double insulated ⧈
- Slow action ⊖, change-over contact with double break
- Slow action with overlapping contacts available
- Suitable for in-line mounting
- With pre-wired cable, cable length 1 metre
- Special version only for dust Ex zone 22

// EX 13

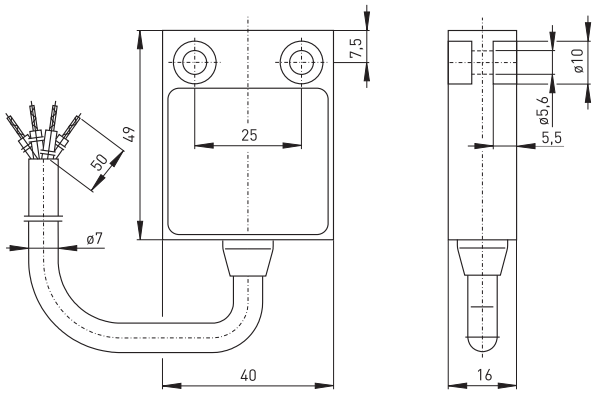

Technical data

Standards	EN 60947-5-1; EN 1088; EN 60079-0, EN 60079-1, EN 60079-31; EN ISO 13849-1
Enclosure	glass-fibre reinforced, shock-proof thermoplastic, self-extinguishing UL 94-V0
Degree of protection	IP 65 according to EN 60529
Contact material	silver
Switching system	slow action, positive break NC contact ⊖
Switching elements	change-over contact with double break Zb, galvanically separated contact bridges
Connection	cable H05VV-F, 4 x 0.75 mm^2
Cable length	1, 2, 5 and 10 m
B_{10d} (10 % load)	2 million
T_M	max. 20 years
U_{imp}	4 kV
U_i	250 V
I_{the}	T6: 6 A; T5: 3 A
I_e/U_e	6 A/250 VAC; 0.25 A/230 VDC
Utilisation category	AC-15, DC-13
Max. fuse rating	6 A gL/gG D-fuse
Ambient temperat. Ta	T6: –20 °C ... +65 °C, T5: –20 °C ... +95 °C
Mechanical life	> 1 million operations
Switching frequency	1800/h
Repeat accuracy	± 0.1 mm
Contact gap	max. 2 x 3.5 mm
Ex marking	Ⓔx II 2G Ex d IIC T6/T5 Gb, II 2D Ex tb IIIC T80°C/T95°C Db IECEx Ex d IIC T6/T5 Gb, Ex tb IIIC T80°C/T95°C Db
Approvals	PTB 03 ATEX 1068 X, IECEx PTB 06.0053 X

Type code	Ex 13 WR 1Ö/1S-V-S-1m-3D

Equipment Categ. 3D, Staub-Ex Zone 22
Cable length 1 m, (2 m, 5 m, 10 m)
Cable entry on side
Mechanical latching
Contact type 1Ö/1S, (UE)
Actuator R (H, TK, D, etc. ...)
Collar
Series
Ex certified component

Ex position switches
// Series Ex 13, variants

Features/Options
- Special cables possible on request
- Gold-plated contacts available on request
- Mechanical latching: locking by actuation, unlocking by pulling the unlocking button

Features/Options
- Actuating speed 0.5 m/s with an actuating angle of 0°

// Cable entry on side S

// Plunger

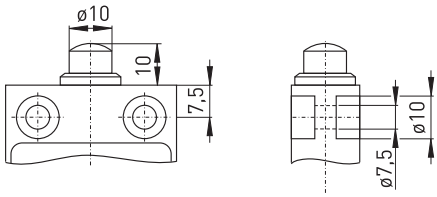

// Mechanical latching V

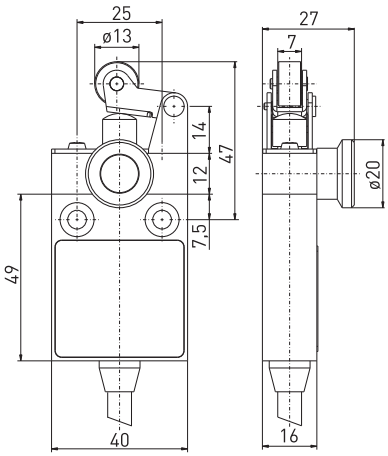

Contact variants: switch travel/contacts

	Slow action
1 NC/1 NO contact	Ex 13 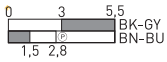

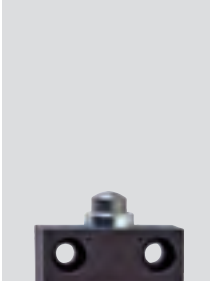

Features/Options
- Actuating speed 0.5 m/s with an actuating angle of 0°
- Collar to protect against the entry of foreign bodies

// Plunger with collar W

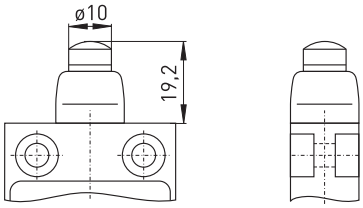

Contact variants: switch travel/contacts

	Slow action
1 NC/1 NO contact	Ex 13 W 1Ö/1S 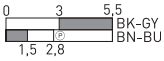

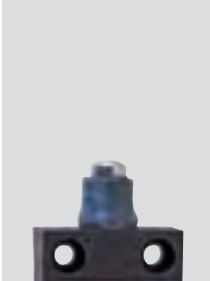

Features/Options
- Actuating speed 0.5 m/s with an actuating angle of 0°

// Plunger for front mounting F

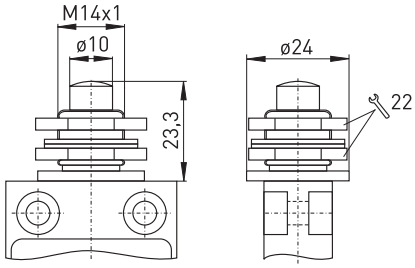

Contact variants: switch travel/contacts

	Slow action
1 NC/1 NO contact	Ex 13 F 1Ö/1S 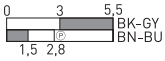

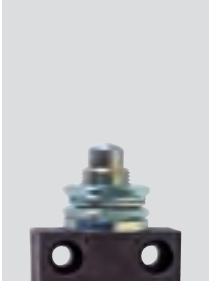

Features/Options
- Actuating speed 0.5 m/s with an actuating angle of 20°
- Can be actuated in line with or from side of switch axis
- Actuator head with captive stainless steel ball actuator
- Exact repeatability of switching point

// Ball plunger KU

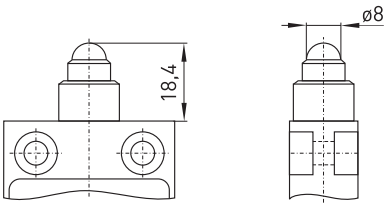

Contact variants: switch travel/contacts

	Slow action
1 NC/1 NO contact	Ex 13 KU 1Ö/1S 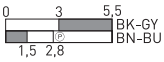

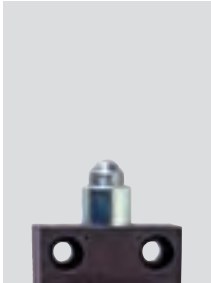

Features/Options
- Actuating speed 0.5 m/s with an actuating angle of 15°
- Can be actuated in line with or from side of switch axis
- Actuator head with captive stainless steel ball actuator
- Exact repeatability of switching point
- Collar to protect against the entry of foreign bodies

// Ball plunger with collar WKU

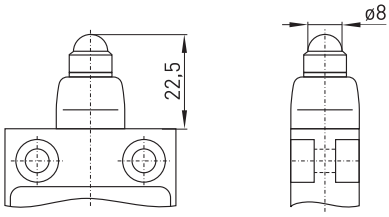

Contact variants: switch travel/contacts

	Slow action
1 NC/1 NO contact	Ex 13 WKU 1Ö/1S 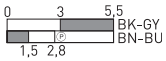

Ex position switches
// Series Ex 13, actuators

Features/Options
- Actuating speed 0.5 m/s with an actuating angle of 20°
- Can be actuated in line with or from side of switch axis
- Actuator head with captive stainless steel ball actuator
- Ball diameter: 8 mm
- Exact repeatability of switching point

Features/Options
- Actuating speed 0.5 m/s with an actuating angle of 30°
- Metal roller
- Available with actuator repositioned by 90°

// Ball plunger for front mounting FKU

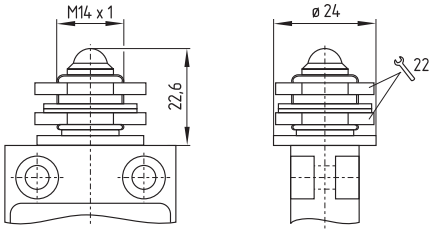

Contact variants: switch travel/contacts

	Slow action
1 NC/1 NO contact	Ex 13 FKU 1Ö/1S 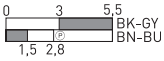

// Roller plunger R

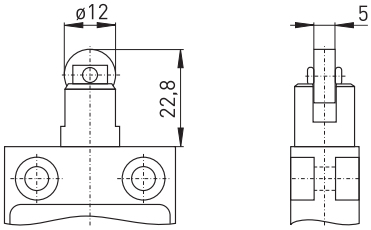

Contact variants: switch travel/contacts

	Slow action
1 NC/1 NO contact	Ex 13 R 1Ö/1S 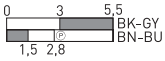

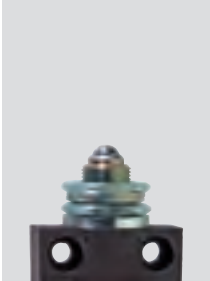

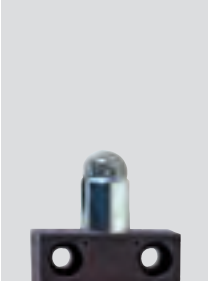

Features/Options
- Actuating speed 0.5 m/s with an actuating angle of 25°
- Metal roller
- Available with actuator repositioned by 90°
- Collar to protect against the entry of foreign bodies

// Roller plunger with collar WR

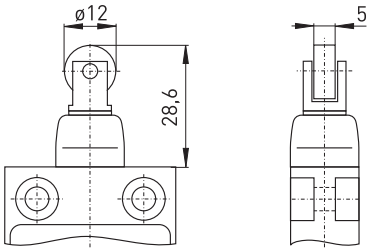

Contact variants: switch travel/contacts

	Slow action
1 NC/1 NO contact	Ex 13 WR 1Ö/1S 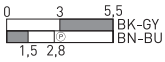

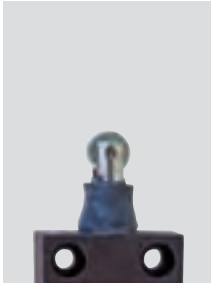

Features/Options
- Actuating speed 0.5 m/s with an actuating angle of 25°
- Metal roller
- Available with actuator repositioned by 90°

// Roller plunger for front mounting FR

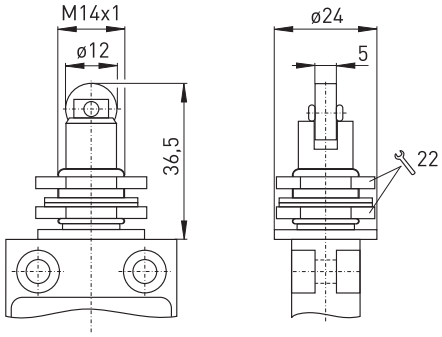

Contact variants: switch travel/contacts

	Slow action
1 NC/1 NO contact	Ex 13 FR 1Ö/1S 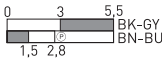

Ex position switches
// Series Ex 13, actuators

Features/Options
- Actuating speed 0.5 m/s with an actuating angle of α = 40° and β = 25°
- Metal roller
- Available with actuator repositioned by 180°
- Collar to protect against the entry of foreign bodies
- With plastic roller available on request

Note
Actuation from the left should be avoided since this reduces the mechanical life of the position switch.

// Roller lever with collar WH

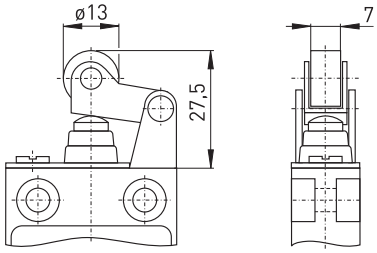

Contact variants: switch travel/contacts

	Slow action
1 NC/1 NO contact	Ex 13 WH 1Ö/1S 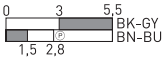

Features/Options
- Actuating speed 0.5 m/s with an actuating angle of α = 40° and β = 25°
- Metal roller
- Available with actuator repositioned by 180°
- Collar to protect against the entry of foreign bodies
- With plastic roller available on request

Note
Actuation from the left should be avoided since this reduces the mechanical life of the position switch.

// Long roller lever with collar WHL

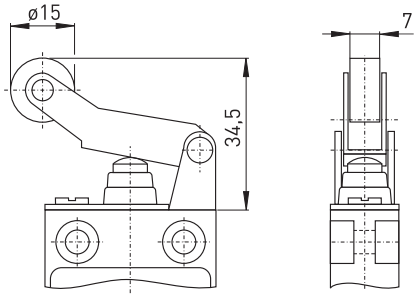

Contact variants: switch travel/contacts

	Slow action
1 NC/1 NO contact	Ex 13 WHL 1Ö/1S 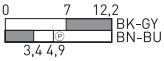

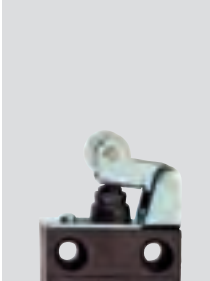

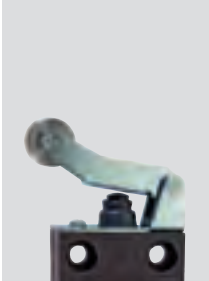

Features/Options
- Actuating speed 0.5 m/s with an actuating angle of α = 40°
- Actuation only possible from right-hand side
- Free movement of actuator from the other side
- Metal roller
- Available with actuator repositioned by 180°
- Collar to protect against the entry of foreign bodies
- With plastic roller available on request

// Rocking roller lever with collar WHK

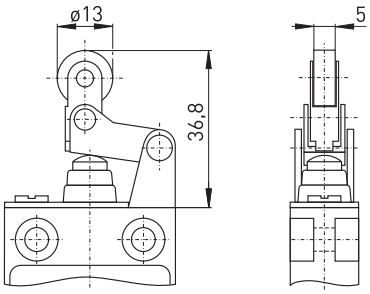

Contact variants: switch travel/contacts

	Slow action
1 NC/1 NO contact	Ex 13 WHK 1Ö/1S 0 3,6 6,3 BK-GY 1,6 BN-BU

Features/Options
- Actuating speed 0.5 m/s with an actuating angle of α = 30°
- Actuation parallel to switch from below
- Metal roller
- Available with actuator repositioned by 180°
- Collar to protect against the entry of foreign bodies
- With plastic roller available on request

// Parallel roller lever with collar WPH

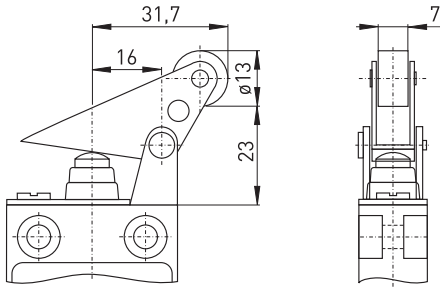

Contact variants: switch travel/contacts

	Slow action
1 NC/1 NO contact	Ex 13 WPH 1Ö/1S 0 3,2 5,4 BK-GY 1,5 3 BN-BU

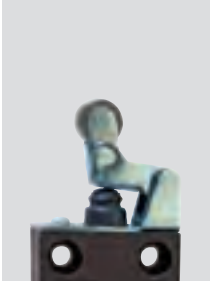

Features/Options
- Actuating speed 0.5 m/s with an actuating angle of 45°
- Wear-resistant thermoplastic roller
- Lever can be repositioned in 10° steps clockwise or counter-clockwise
- Actuator can be repositioned by 180°
- With metal roller available on request

// Rocking roller lever D

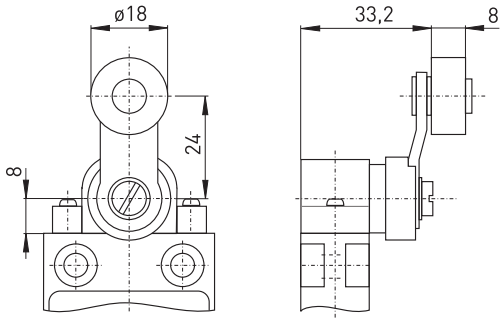

Contact variants: switch travel/contacts

	Slow action
1 NC/1 NO contact	Ex 13 D 1Ö/1S 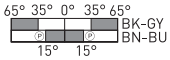

Features/Options
- Actuating speed 0.5 m/s with an actuating angle of 45°
- Wear-resistant thermoplastic roller
- Lever can be repositioned in 10° steps clockwise or counter-clockwise
- Actuator can be repositioned by 180°
- With metal roller available on request

// Long rocking roller lever DL

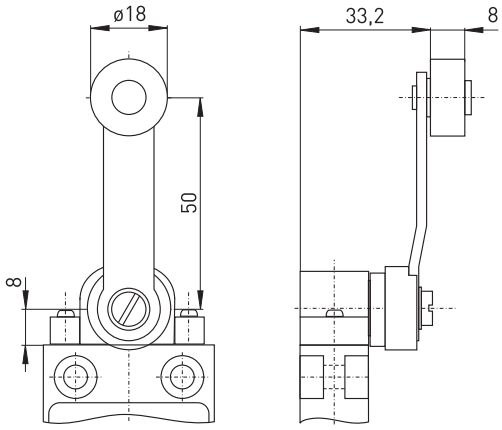

Contact variants: switch travel/contacts

	Slow action
1 NC/1 NO contact	Ex 13 DL 1Ö/1S 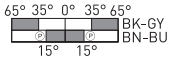

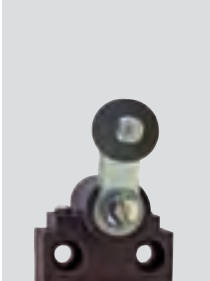

Features/Options
- Actuating speed 0.5 m/s with an actuating angle of 45°
- Wear-resistant thermoplastic roller
- Lever can be repositioned in 10° steps clockwise or counter-clockwise
- Actuator can be repositioned by 180°
- With metal roller available on request

// Adjustable-length roller lever DS

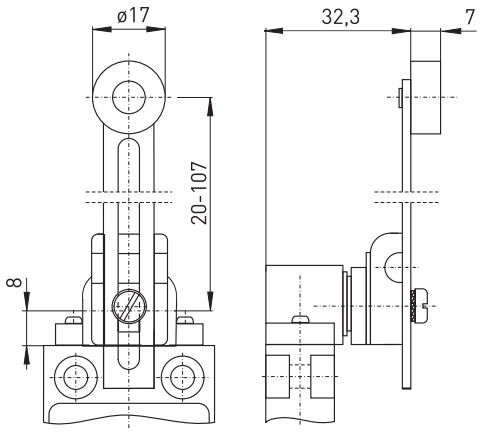

Contact variants: switch travel/contacts

	Slow action
1 NC/1 NO contact	Ex 13 DS 1Ö/1S 65° 35° 0° 35° 65° BK-GY BN-BU 15° 15°

Features/Options
- Wear-resistant thermoplastic tip
- Lever can be repositioned in 10° steps clockwise or counter-clockwise
- Actuator can be repositioned by 180°

// Wire roller lever DD

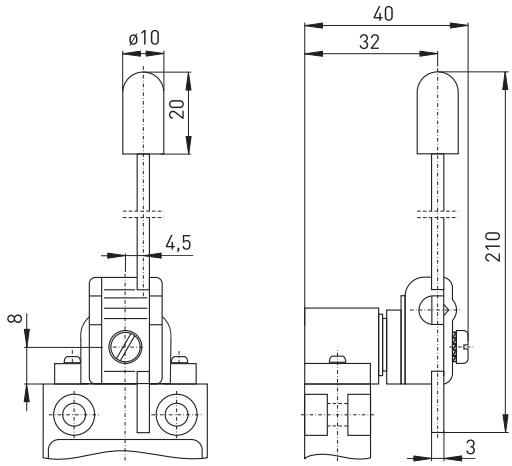

Contact variants: switch travel/contacts

	Slow action
1 NC/1 NO contact	Ex 13 DD 1Ö/1S 65° 35° 0° 35° 65° BK-GY BN-BU 15° 15°

Ex position switches
// Series Ex 13, actuators

Features/Options
- Spring rod can be actuated from any direction
- Spring rod can be shortened 30 mm in actuating area
- Exact linear actuation not unnecessary
- Elasticity of spring allows for deflection above the max. switching angle of 18°

Features/Options
- With rounded steel tip
- Spring rod can be actuated from any direction
- Elasticity of spring allows for deflection above the max. switching angle of 18°

// Long spring rod TL

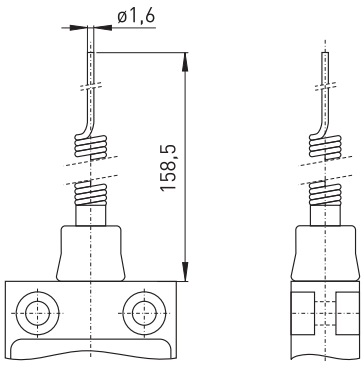

// Spring rod with rounded steel tip TF

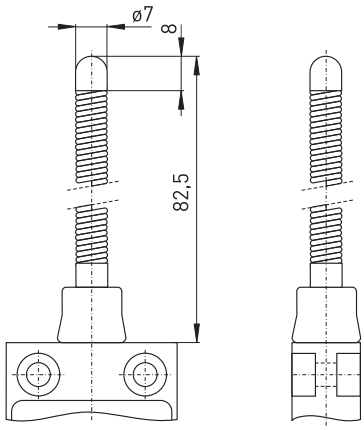

Contact variants: switch travel/contacts

	Slow action
1 NC/1 NO contact	Ex 13 TL 1Ö/1S 18° 15° 0° 15° 18° BK-GY 10° 10° BN-BU

Contact variants: switch travel/contacts

	Slow action
1 NC/1 NO contact	Ex 13 TF 1Ö/1S 18° 15° 0° 15° 18° BK-GY 10° 10° BN-BU

Features/Options
- Wear-resistant plastic tip
- Spring rod can be actuated from any direction
- Elasticity of spring allows for deflection above the max. switching angle of 18°

// Spring rod with plastic tip TK

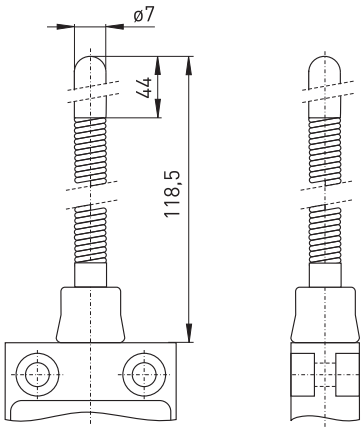

Contact variants: switch travel/contacts

	Slow action
1 NC/1 NO contact	Ex 13 TK 1Ö/1S 18° 15° 0° 15° 18° BK-GY BN-BU 10° 10°

Features/Options
- Ex zone 1 and 21
- Thermoplastic enclosure
- Double insulated ⧈
- Slow action with overlapping contacts available
- Mounting details to DIN EN 50 047
- Suitable for in-line mounting
- With pre-wired cable, cable length 1 metre
- Special version only for dust Ex zone 22 available

// EX/EXM 14

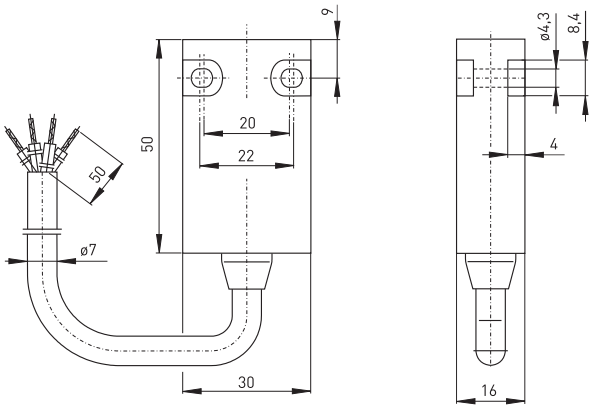

Technical data

Standards	EN 60947-5-1; EN 1088; EN 60079-0, EN 60079-1, EN 60079-31; EN ISO 13849-1
Enclosure	glass-fibre reinforced, shock-proof thermoplastic, self-extinguishing UL 94-V0
Degree of protection	IP 65 according to EN 60529
Contact material	silver
Switching system	slow or snap action
Switching elements	Ex 14: change-over with double break Zb or 2 NC contacts, galvan. sep. contact bridges; ExM 14: change-over cont. with single break C or Za
Connection	cable H05VV-F, 3/4 x 0.75mm^2
B_{10d} (10 % load)	Ex 14: 2 million
T_M	max. 20 years
U_{imp}	4 kV
U_i	250 V
I_{the}	T6: Zb: 6 A; C and Za: 5 A; T5: 3 A
I_e/U_e	Zb: 6 A/250 VAC, 0.25 A/230 VDC; Za: 5 A/250 VAC, 0.2 A/230 VDC, C: 5 A/250 VAC, 0.16 A/230 VDC
Utilisation category	AC-15, DC-13
Max. fuse rating	Zb: 6 A gL/gG D-fuse; C, Za: 5 A gL/gG D-fuse
Ambient temperat. Ta	T6: –20°C...+65°C, C: +60°C; T5: –20°C...+95°C
Mechanical life	> 1 million operations
Switching frequency	1800/h
Repeat accuracy	± 0.1 mm
Contact gap	max. 2 x 4 mm
Note	Switch must be protected from mechanical damage!
Ex marking	Ⓔx II 2G Ex d IIC T6/T5 Gb, II 2D Ex tb IIIC T80°C/T90°C Db IECEx Ex d IIC T6/T5 Gb, Ex tb IIIC T80°C/T90°C Db
Approvals	ExM 14: PTB 03 ATEX 1069 X ExM 14 1Ö/1S: PTB 03 ATEX 1006 X Ex 14: PTB 03 ATEX 1070X, IECEx PTB06.0098X

Type code ExM 14 WR 1Ö/1S-RE-S-1m-3D

- Equipment Categ. 3D, dust Ex zone 22
- Cable length 1 m, (2 m, 5 m, 10 m)
- Cable entry on side
- Latching
- Contact type 1Ö/1S, (UE, 2Ö)
- Actuator R (H, TK, D, etc. ...)
- Collar
- Series
- M Snap action
- Ex certified component

Ex position switches
// Series Ex/ExM 14, actuators

Features/Options
- Snap action, change-over contact available with double break e.g. ExM 14 R 1Ö/1S
- Slow action available with 2 NC contacts
- With gold-plated contacts available on request
- With latching: On-/Off principle

Features/Options
- Actuating speed 0.5 m/s with an actuating angle of 0°

// Cable entry on side S

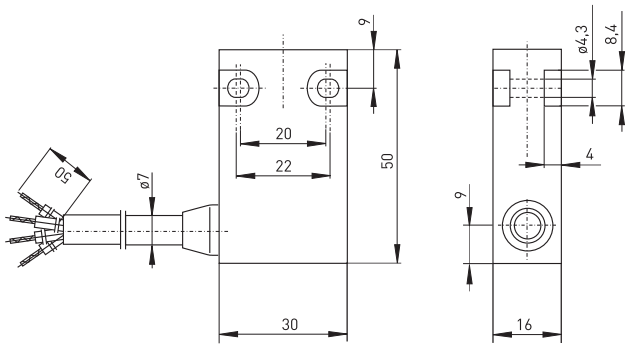

// Plunger

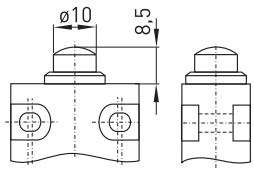

// With latching RE

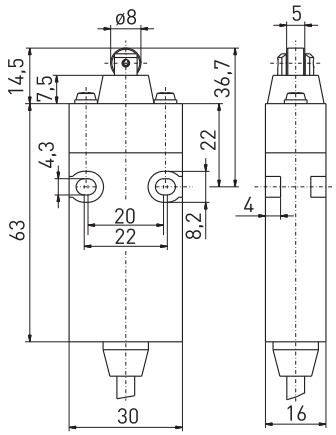

Contact variants: switch travel/contacts

	Snap action	Slow action
1 NC/1 NO contact	ExM 14 1Ö/1S 0 1,5 5,5 BK-GY BN-BU	Ex 14 1Ö/1S 0 3 5,5 BK-GY BN-BU 1,5 2,8
1 change-over contact	ExM 14 0 1,5 5,5 GY-BK GY-BN	
2 NC contacts		Ex 14 2Ö 0 5,5 BK-GY BN-BU 1,5 2,8

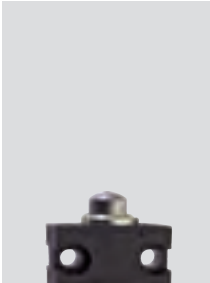

Features/Options
- Actuating speed 0.5 m/s with an actuating angle of 0°
- Collar to protect against the entry of foreign bodies

// Plunger with collar W

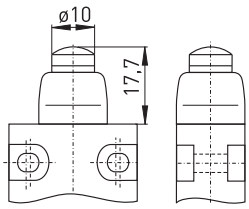

Contact variants: switch travel/contacts

	Snap action	Slow action
1 NC/1 NO contact	**ExM 14 W 1Ö/1S** 0 1,5 5,5 BK-GY BN-BU	**Ex 14 W 1Ö/1S** 0 3 5,5 BK-GY BN-BU 1,5 2,8
1 change-over contact	**ExM 14 W** 0 1,5 5,5 GY-BK GY-BN	
2 NC contacts		**Ex 14 W 2Ö** 0 5,5 BK-GY BN-BU 1,5 2,8

Features/Options
- Actuating speed 0.5 m/s with an actuating angle of 0°

// Plunger for front mounting F

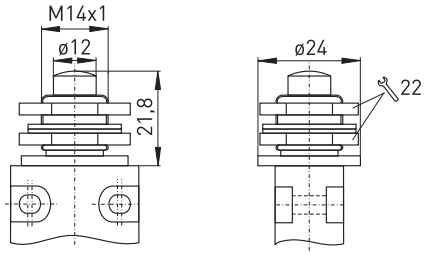

Contact variants: switch travel/contacts

	Snap action	Slow action
1 NC/1 NO contact	**ExM 14 F 1Ö/1S** 0 1,5 5,5 BK-GY BN-BU	**Ex 14 F 1Ö/1S** 0 3 5,5 BK-GY BN-BU 1,5 2,8
1 change-over contact	**ExM 14 F** 0 1,5 5,5 GY-BK GY-BN	
2 NC contacts		**Ex 14 F 2Ö** 0 5,5 BK-GY BN-BU 1,5 2,8

Features/Options
- Actuating speed 0.5 m/s with an actuating angle of 20°
- Can be actuated in line with or from side of switch axis
- Actuator head with captive stainless steel ball actuator
- Exact repeatability of switching point

// Ball plunger KU

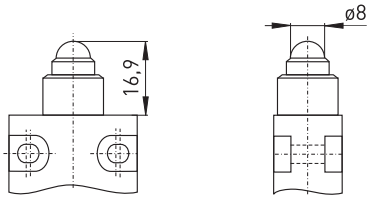

Contact variants: switch travel/contacts

	Snap action	Slow action
1 NC/1 NO contact	ExM 14 KU 1Ö/1S 0 1,5 5,5 BK-GY BN-BU	Ex 14 KU 1Ö/1S 0 3 5,5 BK-GY BN-BU 1,5 2,8
1 change-over contact	ExM 14 KU 0 1,5 5,5 GY-BK GY-BN	
2 NC contacts		Ex 14 KU 2Ö 0 5,5 BK-GY BN-BU 1,5 2,8

Features/Options
- Actuating speed 0.5 m/s with an actuating angle of 20°
- Can be actuated in line with or from side of switch axis
- Actuator head with captive stainless steel ball actuator
- Exact repeatability of switching point
- Collar to protect against the entry of foreign bodies

// Ball plunger with collar WKU

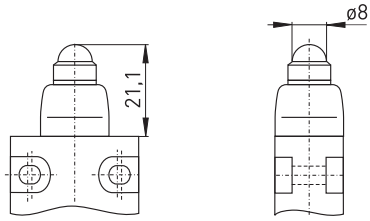

Contact variants: switch travel/contacts

	Snap action	Slow action
1 NC/1 NO contact	ExM 14 WKU 1Ö/1S 0 1,5 5,5 BK-GY BN-BU	Ex 14 WKU 1Ö/1S 0 3 5,5 BK-GY BN-BU 1,5 2,8
1 change-over contact	ExM 14 WKU 0 1,5 5,5 GY-BK GY-BN	
2 NC contacts		Ex 14 WKU 2Ö 0 5,5 BK-GY BN-BU 1,5 2,8

Features/Options
- Actuating speed 0.5 m/s with a vertical actuating angle of 20°
- Can be actuated in line with or from side of switch axis
- Actuator head with captive stainless steel ball actuator
- Exact repeatability of switching point

Features/Options
- Actuation from any direction
- Actuator head with captive stainless steel ball actuator

// Ball plunger for front mounting FKU

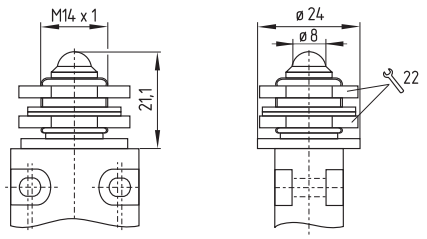

// Vertical ball plunger VKU

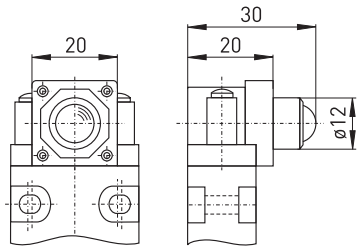

Contact variants: switch travel/contacts

	Snap action	Slow action
1 NC/1 NO contact	ExM 14 FKU 1Ö/1S 0 1,5 5,5 BK-GY BN-BU	Ex 14 FKU 1Ö/1S 0 3 5,5 BK-GY BN-BU 1,5 2,8
1 change-over contact	ExM 14 FKU 0 1,5 5,5 GY-BK GY-BN	
2 NC contacts		Ex 14 FKU 2Ö 0 5,5 BK-GY BN-BU 1,5 2,8

Contact variants: switch travel/contacts

	Snap action	Slow action
1 NC/1 NO contact	ExM 14 VKU 1Ö/1S 0 1,5 5,5 BK-GY BN-BU	Ex 14 VKU 1Ö/1S 0 3 5,5 BK-GY BN-BU 1,5 2,8
1 change-over contact	ExM 14 VKU 0 1,5 5,5 GY-BK GY-BN	
2 NC contacts		Ex 14 VKU 2Ö 0 5,5 BK-GY BN-BU 1,5 2,8

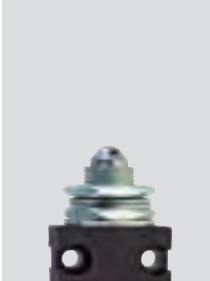

Features/Options
- Actuating speed 0.5 m/s with an actuating angle of 30°
- Metal roller
- Available with actuator repositioned by 90°

// Roller plunger R

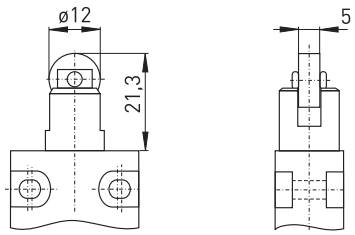

Contact variants: switch travel/contacts

	Snap action	Slow action
1 NC/1 NO contact	**ExM 14 R 1Ö/1S** 0 1,5 5,5 BK-GY BN-BU	**Ex 14 R 1Ö/1S** 0 3 5,5 BK-GY BN-BU 1,5 2,8
1 change-over contact	**ExM 14 R** 0 1,5 5,5 GY-BK GY-BN	
2 NC contacts		**Ex 14 R 2Ö** 0 5,5 BK-GY BN-BU 1,5 2,8

Features/Options
- Actuating speed 0.5 m/s with an actuating angle of 25°
- Metal roller
- Available with actuator repositioned by 90°
- Collar to protect against the entry of foreign bodies

// Roller plunger with collar WR

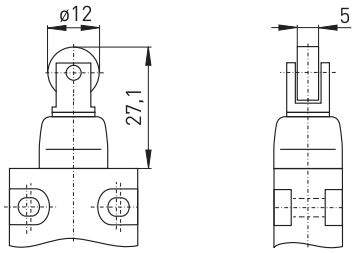

Contact variants: switch travel/contacts

	Snap action	Slow action
1 NC/1 NO contact	**ExM 14 WR 1Ö/1S** 0 1,5 5,5 BK-GY BN-BU	**Ex 14 WR 1Ö/1S** 0 3 5,5 BK-GY BN-BU 1,5 2,8
1 change-over contact	**ExM 14 WR** 0 1,5 5,5 GY-BK GY-BN	
2 NC contacts		**Ex 14 WR 2Ö** 0 5,5 BK-GY BN-BU 1,5 2,8

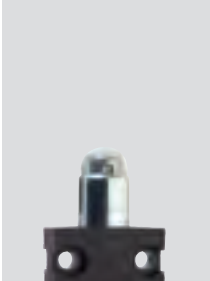

Ex position switches
// Series Ex/ExM 14, actuators

Features/Options
- Actuating speed 0.5 m/s with an actuating angle of 25°
- Metal roller
- Available with actuator repositioned by 90°

Features/Options
- Available with actuator repositioned by 90°
- Wear-resistant thermoplastic roller

// Roller plunger for front mounting FR

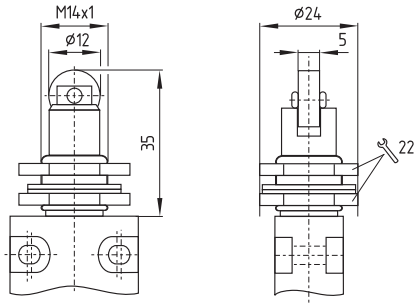

// Vertical roller plunger VR

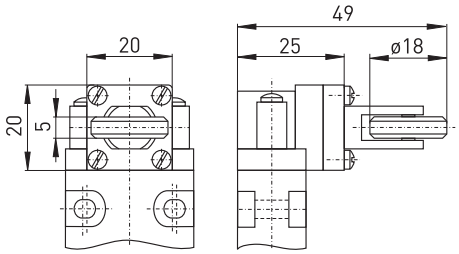

Contact variants: switch travel/contacts

	Snap action	Slow action
1 NC/1 NO contact	**ExM 14 FR 1Ö/1S** 0 1,5 5,5 BK-GY BN-BU	**Ex 14 FR 1Ö/1S** 0 3 5,5 BK-GY BN-BU 1,5 2,8
1 change-over contact	**ExM 14 FR** 0 1,5 5,5 GY-BK GY-BN	
2 NC contacts		**Ex 14 FR 2Ö** 0 5,5 BK-GY BN-BU 1,5 2,8

Contact variants: switch travel/contacts

	Snap action	Slow action
1 NC/1 NO contact	**ExM 14 VR 1Ö/1S** 0 1,5 5,5 BK-GY BN-BU	**Ex 14 VR 1Ö/1S** 0 3 5,5 BK-GY BN-BU 1,5 2,8
1 change-over contact	**ExM 14 VR** 0 1,5 5,5 GY-BK GY-BN	
2 NC contacts		**Ex 14 VR 2Ö** 0 5,5 BK-GY BN-BU 1,5 2,8

Features/Options
- Actuating speed 0.5 m/s with an actuating angle of 45°
- Wear-resistant thermoplastic roller
- Lever can be repositioned in 10° steps clockwise or counter-clockwise
- Actuator can be repositioned by 180°
- With metal roller available on request

// Rocking roller lever D

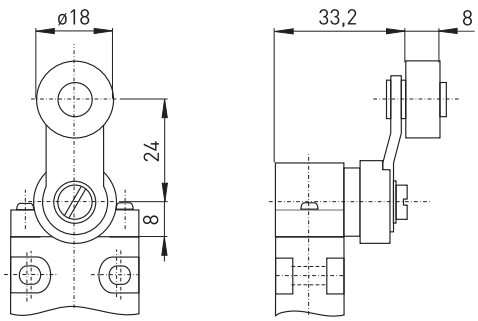

Contact variants: switch travel/contacts

	Snap action	Slow action
1 NC/1 NO contact	**ExM 14 D 1Ö/1S** 70° 0° 70° BK-GY BN-BU 7° 7°	**Ex 14 D 1Ö/1S** 70° 22° 0° 22° 70° BK-GY BN-BU 7° 7°
1 change-over contact	**ExM 14 D** 70° 0° 70° GY-BK GY-BN 7° 7°	
2 NC contacts		**Ex 14 D 2Ö** 70° 0° 70° BK-GY BN-BU 7° 7°

Features/Options
- Actuating speed 0.5 m/s with an actuating angle of 45°
- Wear-resistant thermoplastic roller
- Lever can be repositioned in 10° steps clockwise or counter-clockwise
- Actuator can be repositioned by 180°
- With metal roller available on request

// Long rocking roller lever DL

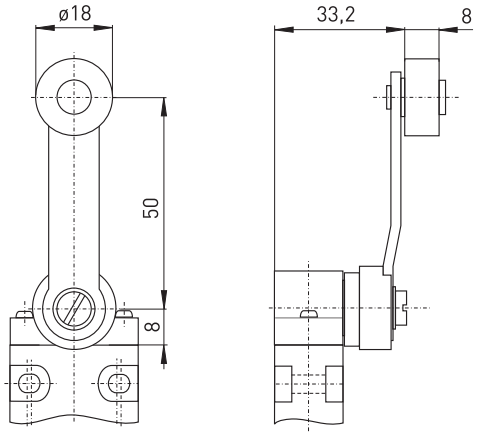

Contact variants: switch travel/contacts

	Snap action	Slow action
1 NC/1 NO contact	**ExM 14 DL 1Ö/1S** 70° 0° 70° BK-GY BN-BU 7° 7°	**Ex 14 DL 1Ö/1S** 70° 22° 0° 22° 70° BK-GY BN-BU 7° 7°
1 change-over contact	**ExM 14 DL** 70° 0° 70° GY-BK GY-BN 7° 7°	
2 NC contacts		**Ex 14 DL 2Ö** 70° 0° 70° BK-GY BN-BU 7° 7°

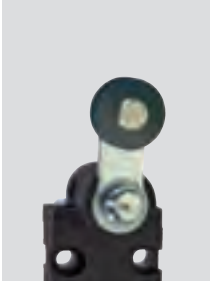

Ex position switches
// Series Ex/ExM 14, actuators

Features/Options
- Actuating speed 0.5 m/s with an actuating angle of 45°
- Wear-resistant thermoplastic roller
- Lever can be repositioned in 10° steps clockwise or counter-clockwise
- Actuator can be repositioned by 180°
- With metal roller available on request

Features/Options
- Spring rod can be actuated from any direction
- Spring rod can be shortened 30 mm in actuating area
- Exact linear actuation not necessary
- Elasticity of spring allows for deflection above the max. switching angle of 18°

// Adjustable-length roller lever DS

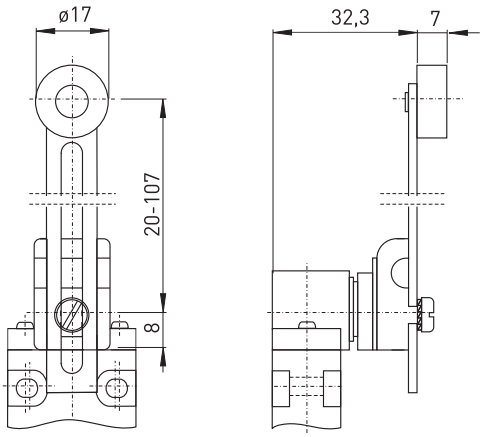

Contact variants: switch travel/contacts

	Snap action	Slow action
1 NC/1 NO contact	ExM 14 DS 1Ö/1S 70° 0° 70° BK-GY BN-BU 7° 7°	Ex 14 DS 1Ö/1S 70° 22° 0° 22° 70° BK-GY BN-BU 7° 7°
1 change-over contact	ExM 14 DS 70° 0° 70° GY-BK GY-BN 7° 7°	
2 NC contacts		Ex 14 DS 2Ö 70° 0° 70° BK-GY BN-BU 7° 7°

// Long spring rod TL

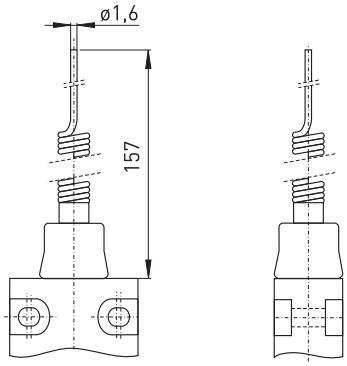

Contact variants: switch travel/contacts

	Snap action	Slow action
1 NC/1 NO contact	ExM 14 TL 1Ö/1S 18° 10° 0° 10° 18° BK-GY BN-BU	Ex 14 TL 1Ö/1S 18° 15° 0° 15° 18° BK-GY BN-BU 10° 10°
1 change-over contact	ExM 14 TL 18° 0° 18° GY-BK GY-BN 10° 10°	
2 NC contacts		Ex 14 TL 2Ö 18° 0° 18° BK-GY BN-BU 10° 10°

Features/Options
- With rounded steel tip
- Spring rod can be actuated from any direction
- Elasticity of spring allows for deflection above the max. switching angle of 18°

// Spring rod with rounded steel tip TF

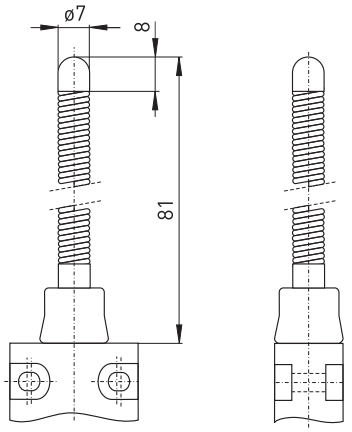

Contact variants: switch travel/contacts

	Snap action	Slow action
1 NC/1 NO contact	ExM 14 TF 1Ö/1S 18° 10° 0° 10° 18° BK-GY BN-BU	Ex 14 TF 1Ö/1S 18° 15° 0° 15° 18° BK-GY BN-BU 10° 10°
1 change-over contact	ExM 14 TF 18° 0° 18° GY-BK GY-BN 10° 10°	
2 NC contacts		Ex 14 TF 2Ö 18° 0° 18° BK-GY BN-BU 10° 10°

Features/Options
- Wear-resistant plastic tip
- Spring rod can be actuated from any direction
- Elasticity of spring allows for deflection above the max. switching angle of 18°

// Spring rod with plastic tip TK

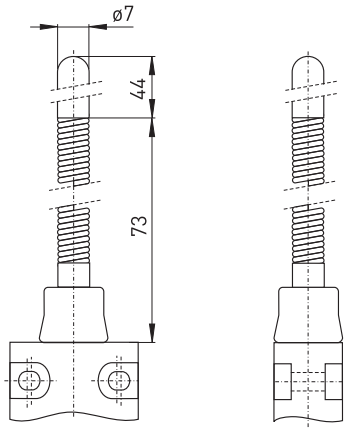

Contact variants: switch travel/contacts

	Snap action	Slow action
1 NC/1 NO contact	ExM 14 TK 1Ö/1S 18° 10° 0° 10° 18° BK-GY BN-BU	Ex 14 TK 1Ö/1S 18° 15° 0° 15° 18° BK-GY BN-BU 10° 10°
1 change-over contact	ExM 14 TK 18° 0° 18° GY-BK GY-BN 10° 10°	
2 NC contacts		Ex 14 TK 2Ö 18° 0° 18° BK-GY BN-BU 10° 10°

Features/Options
- Ex zone 1 and 21
- Thermoplastic enclosure
- Design according to DIN EN 50 047
- Wiring compartment
- Double insulated ⧈
- Available with overlapping contacts
- Actuator heads can be repositioned in 4 x 90° steps
- Angle of offset roller lever can be adjusted in 10° steps
- With gold-plated contacts available on request
- Special version only for dust Ex zone 22 available

// EX 95

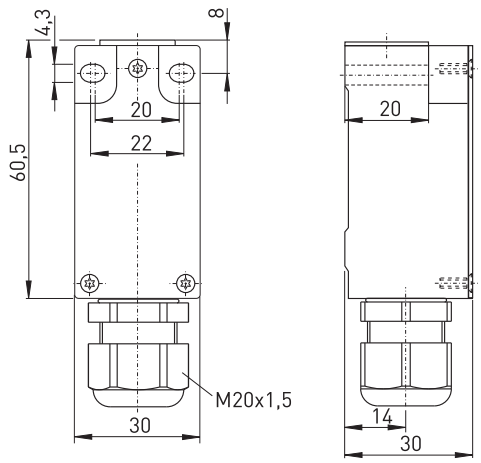

Technical data

Standards	EN 60947-5-1; EN 1088; EN 60079-0, EN 60079-1, EN 60079-7; EN 61241-0, EN 61241-1; EN ISO 13849-1
Design	DIN EN 50 047
Enclosure	glass-fibre reinforced, shock-proof thermoplastic, self-extinguishing UL 94-V0
Switch insert	Ex 95
Degree of protection	IP 67 according to EN 60529
Contact material	silver
Switching system	slow action, positive break NC contact ⊖
Switching elements	change-over contact with double break Zb or 2 NC contacts, galvanically separated contact bridges
Connection	M3 screw clamps
Cable section	max. 1.5 mm² (incl. conductor ferrules)
B_{10d} (10 % load)	2 million
T_M	max. 20 years
U_{imp}	4 kV
U_{imp}	4 kV
U_i	250 V
I_{the}	6 A
I_e/U_e	6 A/250 VAC; 0.25 A/230 VDC
Utilisation category	AC-15, DC-13
Max. fuse rating	6 A gL/gG D-fuse
Ambient temperat. Ta	–20 °C ... +60 °C
Mechanical life	> 1 million operations
Switching frequency	3600/h
Repeat accuracy	± 0.1 mm
Contact gap	max. 2 x 3.5 mm
Ex marking	Ⓔx II 2G Ex de IIC T6, II 2D Ex td A21 IP67 T80°C
Approvals	DMT 01 ATEX E 118; IECEx in 2011

Type code Ex 95 WH 1Ö/1S-3D

- Equipment Categ. 3D, dust Ex zone 22
- Contact type 1Ö/1S, (2Ö, UE)
- Actuator H (R, D, DS, etc. ...)
- Collar
- Series
- Ex certified component

Ex position switches
// Series Ex 95, actuators

Features/Options
- Actuator type B to DIN EN 50 047
- Actuator with collar

Features/Options
- Actuator type C to DIN EN 50 047
- Wear-resistant thermoplastic roller
- Metal roller available on request
- Actuator heads can be repositioned in 4 x 90° steps

// Plunger W

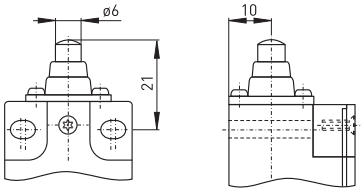

Contact variants: switch travel/contacts

	Slow action
1 NC/1 NO contact	Ex 95 W 1Ö/1S 
1 NC/1 NO contact with overlapping	Ex 95 W UE 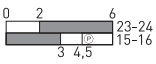
2 NC contacts	Ex 95 W 2Ö 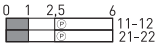

// Roller plunger R

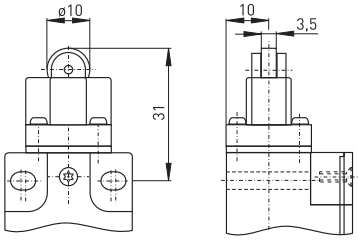

Contact variants: switch travel/contacts

	Slow action
1 NC/1 NO contact	Ex 95 R 1Ö/1S 
1 NC/1 NO contact with overlapping	Ex 95 R UE 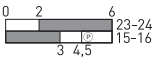
2 NC contacts	Ex 95 R 2Ö 

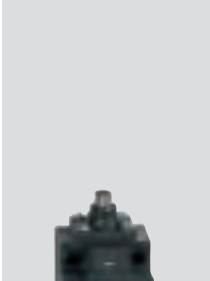

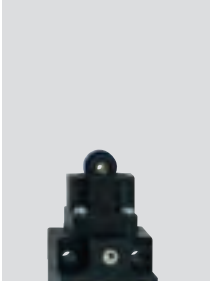

Ex position switches
// Series Ex 95, actuators

Features/Options
- Wear-resistant thermoplastic roller
- Metal roller available on request
- Actuator heads can be repositioned in 4 x 90° steps

// Long roller plunger RL

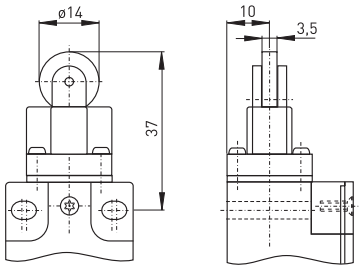

Contact variants: switch travel/contacts

	Slow action
1 NC/1 NO contact	Ex 95 RL 1Ö/1S 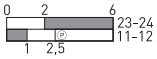
1 NC/1 NO contact with overlapping	Ex 95 RL UE 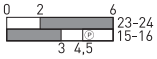
2 NC contacts	Ex 95 RL 2Ö 

Features/Options
- Actuating speed 0.5 m/s with an actuating angle of α = 40° and β = 25°
- Actuator type E to DIN EN 50 047
- Actuator with collar
- Wear-resistant thermoplastic roller
- Actuator heads can be repositioned in 4 x 90° steps
- Metal roller available on request

Note
Actuation from left should be avoided since this reduces the mechanical life of the position switch.

// Roller lever WH

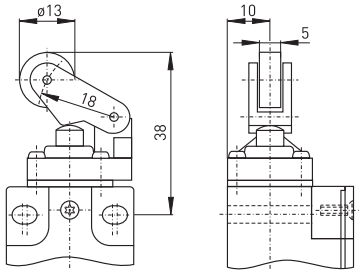

Contact variants: switch travel/contacts

	Slow action
1 NC/1 NO contact	Ex 95 WH 1Ö/1S 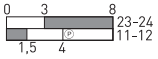
1 NC/1 NO contact with overlapping	Ex 95 WH UE 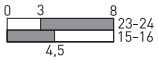
2 NC contacts	Ex 95 WH 2Ö 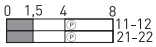

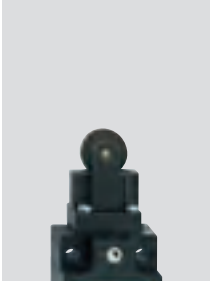

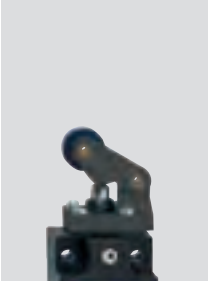

Features/Options
- Actuating speed 0.5 m/s with an actuating angle of α = 40° and β = 25°
- Actuator with collar
- Wear-resistant thermoplastic roller
- Actuator heads can be repositioned in 4 x 90° steps
- Metal roller available on request

Note
Actuation from left should be avoided since this reduces the mechanical life of the position switch.

// Metal roller lever WHM

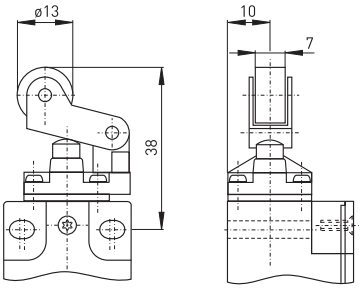

Contact variants: switch travel/contacts

	Slow action
1 NC/1 NO contact	**Ex 95 WHM 1Ö/1S** 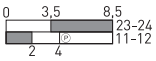
1 NC/1 NO contact with overlapping	**Ex 95 WHM UE** 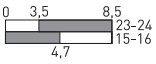
2 NC contacts	**Ex 95 WHM 2Ö** 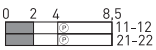

Features/Options
- Actuating speed 0.5 m/s with an actuating angle of α = 40°
- Actuator with collar
- Wear-resistant thermoplastic roller
- Actuator heads can be repositioned in 4 x 90° steps
- Metal roller available on request

Note
Actuation from left should be avoided since this reduces the mechanical life of the position switch.

// Long metal roller lever WHLM

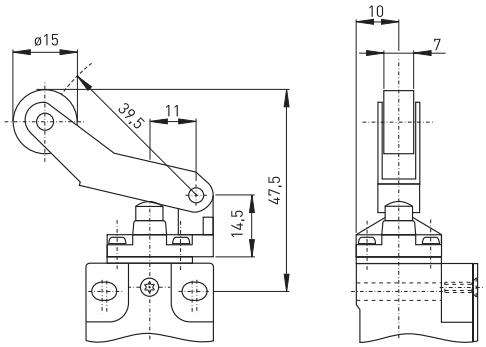

Contact variants: switch travel/contacts

	Slow action
1 NC/1 NO contact	**Ex 95 WHLM 1Ö/1S** 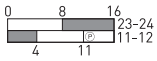
1 NC/1 NO contact with overlapping	**Ex 95 WHLM UE** 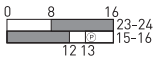
2 NC contacts	**Ex 95 WHLM 2Ö** 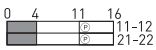

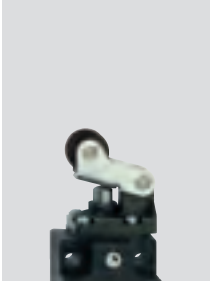

Ex position switches
// Series Ex 95, actuators

Features/Options
- Actuating speed 0.5 m/s with an actuating angle of α = 40°
- Actuation parallel to switch from left
- Wear-resistant thermoplastic roller
- Actuator heads can be repositioned in 4 x 90° steps

Features/Options
- Actuating speed 0.5 m/s with an actuating angle of α = 40°
- Actuator with watertight collar
- Wear-resistant thermoplastic roller
- Actuator heads can be repositioned in 4 x 90° steps
- Actuation only possible from right-hand side
- Free movement of actuator from the other side
- Metal roller available on request

// Thermoplastic roller lever 4K

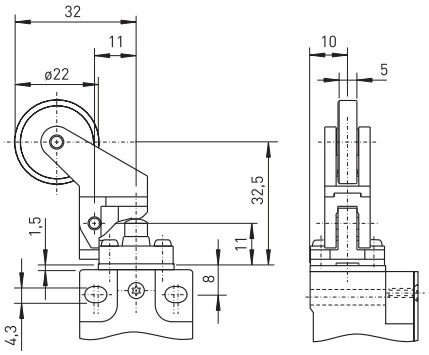

// Rocking roller lever WHKM

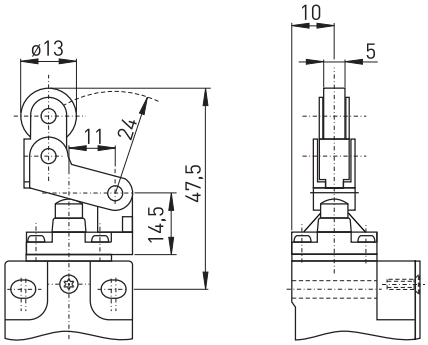

Contact variants: switch travel/contacts

	Slow action
1 NC/1 NO contact	Ex 95 4K 1Ö/1S 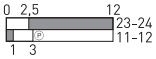
1 NC/1 NO contact with overlapping	Ex 95 4K UE 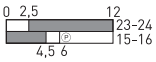
2 NC contacts	Ex 95 4K 2Ö 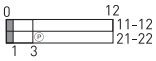

Contact variants: switch travel/contacts

	Slow action
1 NC/1 NO contact	Ex 95 WHKM 1Ö/1S 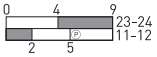
1 NC/1 NO contact with overlapping	Ex 95 WHKM UE 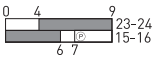
2 NC contacts	Ex 95 WHKM 2Ö 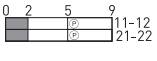

Features/Options
- Actuating speed 0.5 m/s with an actuating angle of α = 30°
- Actuation parallel to switch from below
- Actuator with collar
- Wear-resistant thermoplastic roller
- Actuator heads can be repositioned in 4 x 90° steps
- Metal roller available on request

// Parallel roller lever WPH

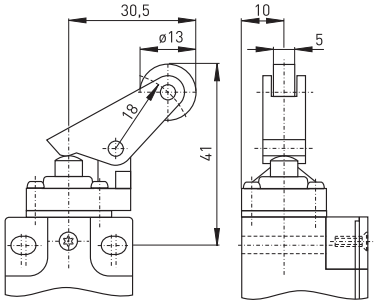

Contact variants: switch travel/contacts

	Slow action
1 NC/1 NO contact	**Ex 95 WPH 1Ö/1S** 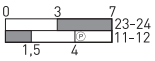
1 NC/1 NO contact with overlapping	**Ex 95 WPH UE** 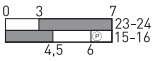
2 NC contacts	**Ex 95 WPH 2Ö** 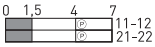

Features/Options
- Actuating speed 0.5 m/s with an actuating angle of α = 30°
- Actuation parallel to switch from below
- Actuator with collar
- Wear-resistant thermoplastic roller
- Actuator heads can be repositioned in 4 x 90° steps
- Metal roller available on request

// Metal parallel roller lever WPHM

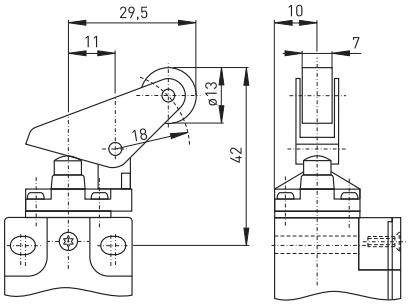

Contact variants: switch travel/contacts

	Slow action
1 NC/1 NO contact	**Ex 95 WPHM 1Ö/1S** 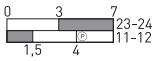
1 NC/1 NO contact with overlapping	**Ex 95 WPHM UE** 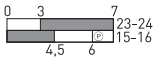
2 NC contacts	**Ex 95 WPHM 2Ö** 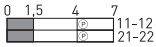

Ex position switches
// Series Ex 95, actuators

Features/Options
- Lever angle adjustable in 10° steps
- Wear-resistant thermoplastic roller
- Actuator heads can be repositioned in 4 x 90° steps
- Metal roller available on request

Features/Options
- Lever angle adjustable in 10° steps
- Actuator heads can be repositioned in 4 x 90° steps

// Rocking roller lever D

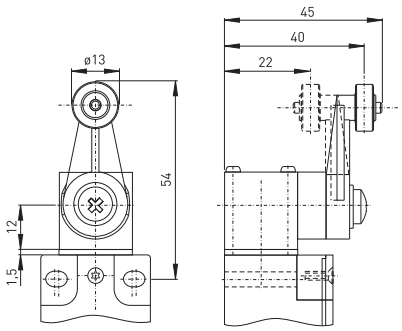

// Roller lever with rubber roller D50

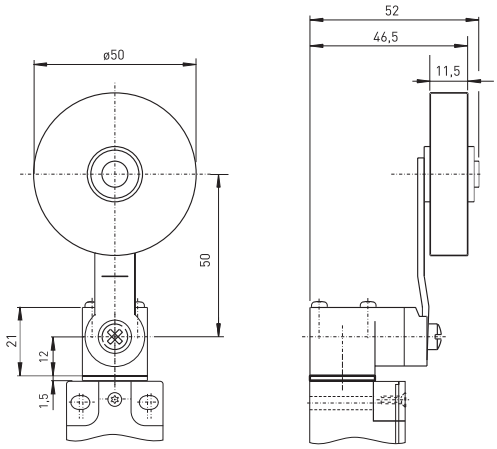

Contact variants: switch travel/contacts

	Slow action
1 NC/1 NO contact	**Ex 95 D 1Ö/1S** 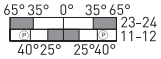
1 NC/1 NO contact with overlapping	**Ex 95 D UE** 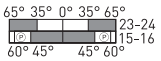
2 NC contacts	**Ex 95 D 2Ö** 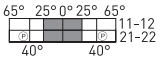

Contact variants: switch travel/contacts

	Slow action
1 NC/1 NO contact	**Ex 95 D50 1Ö/1S** 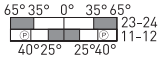
1 NC/1 NO contact with overlapping	**Ex 95 D50 UE** 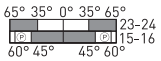
2 NC contacts	**Ex 95 D50 2Ö** 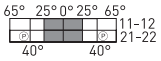

Features/Options
- Lever angle adjustable in 10° steps
- Length of roller lever adjustable
- Wear-resistant thermoplastic roller
- Actuator heads can be repositioned in 4 x 90° steps
- Metal roller available on request

// Adjustable-length roller lever DS

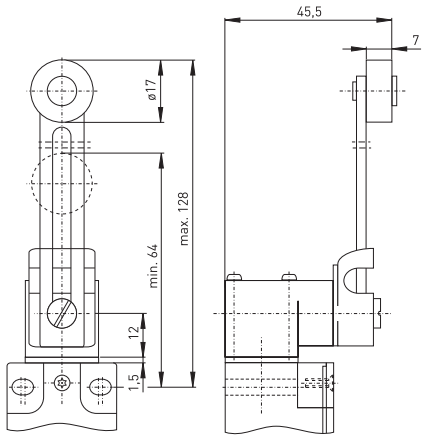

Contact variants: switch travel/contacts

	Slow action
1 NC/1 NO contact	**Ex 95 DS 1Ö/1S** 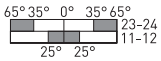
1 NC/1 NO contact with overlapping	**Ex 95 DS UE** 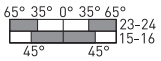
2 NC contacts	**Ex 95 DS 2Ö** 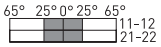

Features/Options
- Lever angle adjustable in 10° steps
- Actuator heads can be repositioned in 4 x 90° steps

// Spring lever DD

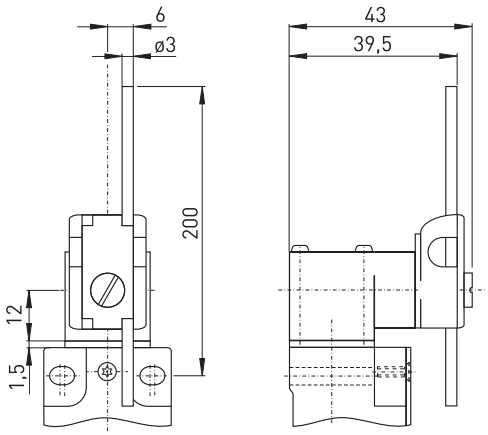

Contact variants: switch travel/contacts

	Slow action
1 NC/1 NO contact	**Ex 95 DD 1Ö/1S** 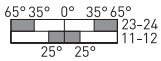
1 NC/1 NO contact with overlapping	**Ex 95 DD UE** 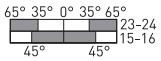
2 NC contacts	**Ex 95 DD 2Ö** 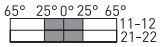

Ex position switches
// Series Ex 95, actuators

Features/Options
- Lever angle adjustable in 10° steps
- Actuator heads can be repositioned in 4 x 90° steps

Features/Options
- Wear-resistant thermoplastic roller
- Spring rod can be actuated from any direction

// Wire lever DF

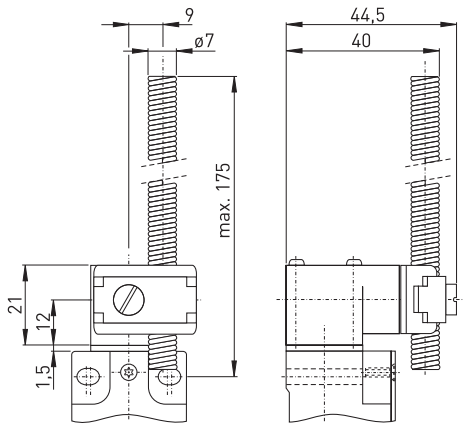

// Spring rod with plastic tip TK

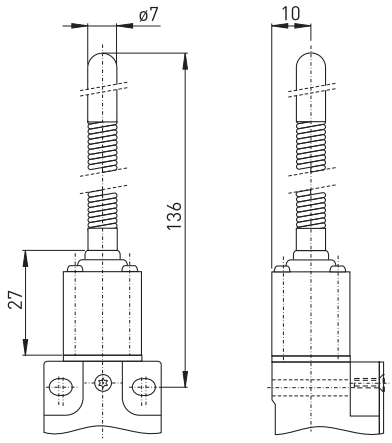

Contact variants: switch travel/contacts

	Slow action
1 NC/1 NO contact	**Ex 95 DF 1Ö/1S** 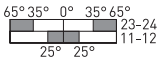
1 NC/1 NO contact with overlapping	**Ex 95 DF UE** 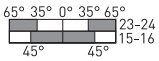
2 NC contacts	**Ex 95 DF 2Ö** 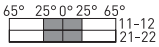

Contact variants: switch travel/contacts

	Slow action
1 NC/1 NO contact	**Ex 95 TK 1Ö/1S** 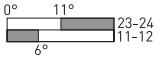
2 NC contacts	**Ex 95 TK 2Ö** 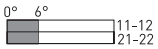

Features/Options
- Spring rod can be actuated from any direction

// Long spring rod TL

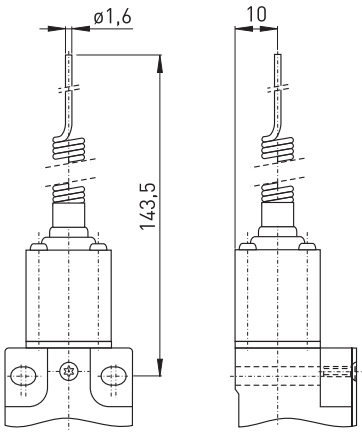

Contact variants: switch travel/contacts

	Slow action
1 NC/1 NO contact	**Ex 95 TL 1Ö/1S** 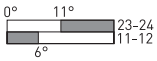
2 NC contacts	**Ex 95 TL 2Ö** 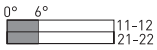

Ex position switches
// Series Ex T 356

Features/Options
- Ex zone 1 and 21
- Thermoplastic enclosure with metal cover
- Mounting dimensions and switching points to EN 50041
- Pre-wired cable available in various lengths
- Actuator heads can be repositioned in 4 x 90° steps
- Angle of offset roller lever can be adjusted in 10° steps
- Special version only for dust Ex zone 22 available

// EX T 356

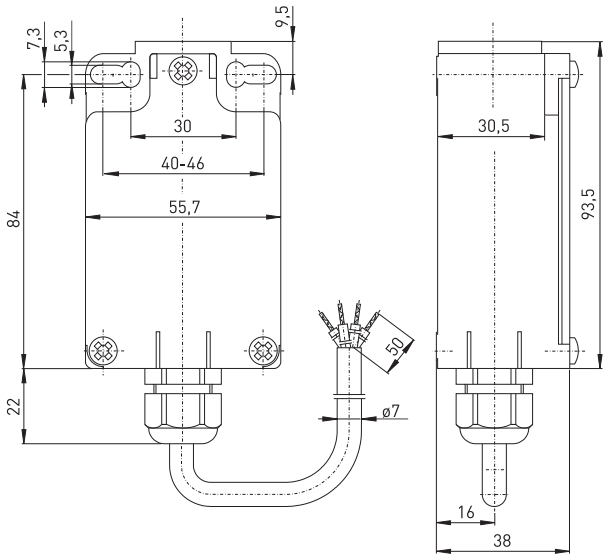

Technical data

Standards	EN 60947-5-1; EN 1088; EN 60079-0, EN 60079-1, EN 60079-31; EN ISO 13849-1
Enclosure	glass-fibre reinforced, shock-proof thermoplastic, self-extinguishing
Cover	steel enamelled
Switch insert	Ex 13
Degree of protection	IP 65 according to EN 60529
Contact material	silver
Switching system	slow action, positive break NC contact ⊖
Switching elements	change-over contact with double break Zb, galvanically separated contact bridges
Connection	cable H05VV-F, 4 x 0.75 mm^2
Cable length	2 or 5 m
B_{10d} (10 % load)	2 million
T_M	max. 20 years
U_{imp}	4 kV
U_i	250 V
I_{the}	T6: 6 A, T5: 3 A
I_e/U_e	6 A/250 VAC; 0.25 A/230 VDC
Utilisation category	AC-15, DC-13
Max. fuse rating	6 A gL/gG D-fuse
Ambient temperat. Ta	T6: –20 °C ... +65 °C; T5 –20 °C ... +95 °C
Mechanical life	> 1 million operations
Switching frequency	1800/h
Repeat accuracy	± 0.1 mm
Contact gap	max. 2 x 4.5 mm
Ex marking	Ⓔx II 2G Ex d IIC T6/T5 Gb, II 2D Ex tb IIIC T80°C/T95°C Db IECEx Ex d IIC T6/T5 Gb, Ex tb IIIC T80°C/T95°C Db
Approvals	PTB 03 ATEX 1068 X*, IECEx PTB 06.0053 X

*referring to the switch insert

Type code Ex T 356 S 1Ö/1S-3D

- Equipment Categ. 3D, dust Ex zone 22
- Contact type 1Ö/1S
- Actuator S (R, 4VH, 4V7H, etc. ...)
- Series
- Ex certified component

Features/Options
- Actuator type B to DIN EN 50 041
- Actuating speed 0.5 m/s with an actuating angle of α = 0°

Features/Options
- Actuator type C to DIN EN 50 041
- Actuating speed 0.5 m/s with an actuating angle of α = 30°

// Plunger S

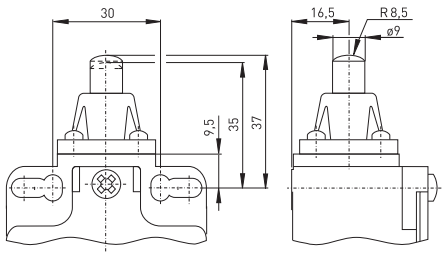

Contact variants: switch travel/contacts

	Slow action
1 NC/1 NO contact	Ex T 356 S 1Ö/1S 0 3,5 6 BK-GY 2 3,3 BN-BU

// Roller plunger R

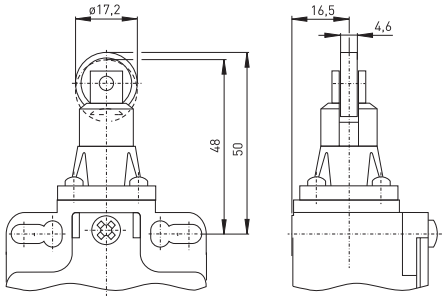

Contact variants: switch travel/contacts

	Slow action
1 NC/1 NO contact	Ex T 356 R 1Ö/1S 0 3,5 6 BK-GY 2 3,3 BN-BU

Ex position switches
// Series Ex T 356, actuators

Features/Options
- Actuator type A to DIN EN 50 041
- Actuating speed 2.5 m/s with an actuating angle of α = 30°
- Wear-resistant thermoplastic roller
- Actuator heads can be repositioned in 4 x 90° steps

Features/Options
- Actuating speed 2.5 m/s with an actuating angle of α = 30°
- Wear-resistant thermoplastic roller
- Actuator heads can be repositioned in 4 x 90° steps
- For safety duties ⊖, positive break, ordering suffix -2138

// Rocking roller lever 4VH

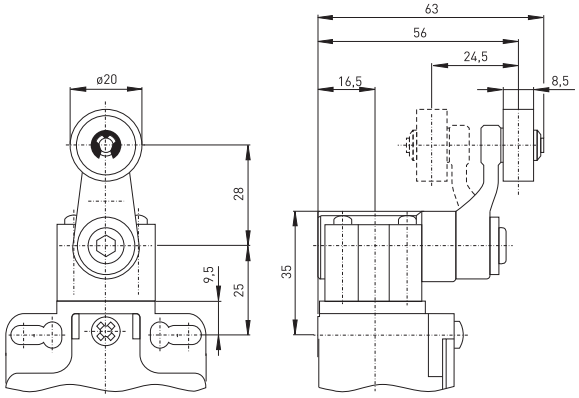

Contact variants: switch travel/contacts

	Slow action
1 NC/1 NO contact	**Ex T 356 4VH 1Ö/1S**

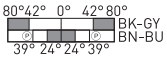

// Adjustable rocking lever 4V7H

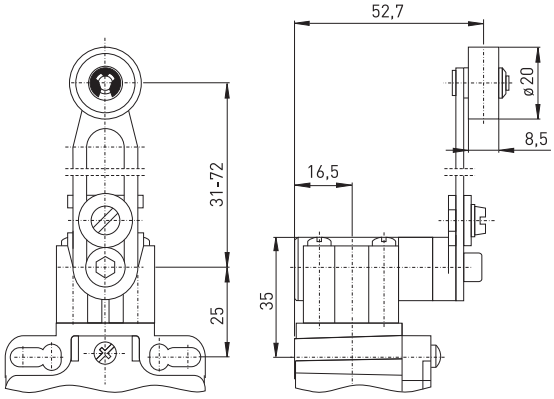

Contact variants: switch travel/contacts

	Slow action
1 NC/1 NO contact	**Ex T 356 4V7H 1Ö/1S**

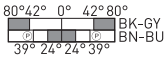

Features/Options
- Actuating speed 2.5 m/s with an actuating angle of α = 30°
- Actuator type D to EN 50041

// Rod lever 4V10H

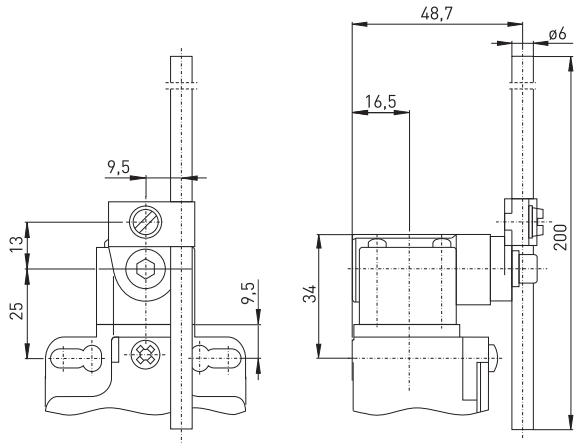

Contact variants: switch travel/contacts

	Slow action
1 NC/1 NO contact	Ex T 356 4V10H 1Ö/1S 80° 42° 0° 42° 80° BK-GY BN-BU 39° 24° 24° 39°

Features/Options
- Ex zone 1 and 21
- Metal enclosure
- Snap action, change-over contact with single break
- Suitable for in-line mounting
- With pre-wired cable, cable length 1 metre
- Special version only for dust Ex zone 22 available

// EX 12

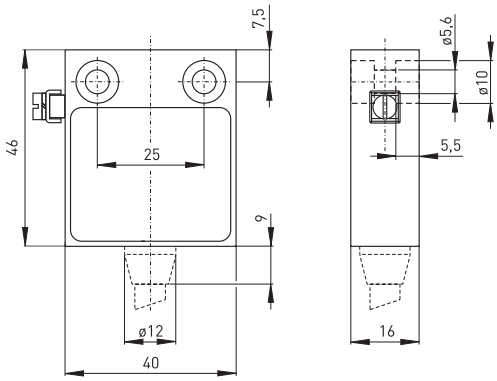

Technical data

Standards	EN 60079-0, EN 60079-1, EN 60079-31
Enclosure	GD-AL alloy
Degree of protection	IP 65 according to IEC/EN 60529
Contact material	silver
Switching elements	change-over contact with single break
Switching system	snap action
Connection	cable H05VV-F
Cable section	4 x 0.75 mm^2
Cable length	1 m
U_{imp}	4 kV
U_i	250 V
I_{the}	T6: 5 A; T5: 3 A
Utilisation category	AC-15; DC-13
Ie/Ue	5 A/250 VAC; 0.16 A/230 VDC
Max. fuse rating	5 A gL/gG D-fuse
Mechanical life	> 1 million operations
Switching frequency	1800/h
Ambient temperat. Ta	T6: –20 °C ... + 60 °C; T5: –20 °C ... +95 °C
Mechanical life	> 1 million operations
Switching frequency	1800/h
Repeat accuracy	± 0.1 mm
Ex marking	Ⓔx II 2G Ex d IIC T6/T5 Gb, II 2D Ex tb IIIC T80°C/T95°C Db
Approvals	PTB 03 ATEX 1067 X IECEx in 2011

Type code Ex 12 WKU-S-B-1m-3D

- Equipment Categ. 3D, dust Ex zone 22
- Cable length 1 m, (2 m, 5 m, 10 m)
- Mounting thread M16 x 1.5
- Cable on side
- Actuator KU (H, TK, D, etc. ...)
- Watertight collar
- Series
- Ex certified component

Features/Options
- With gold-plated contacts available on request
- Available with hard-coated enclosure for use in aggressive conditions

// Cable on side

// Mounting thread M16 x 1.5

// Cable on side

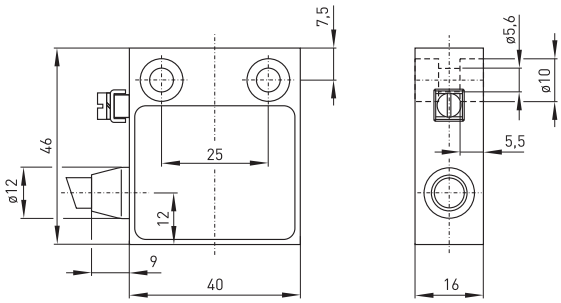

// Mounting thread M16 x 1.5

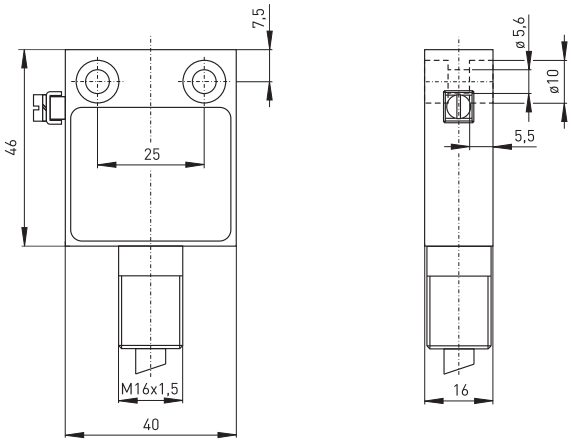

// Mounting thread on side M16 x 1.5

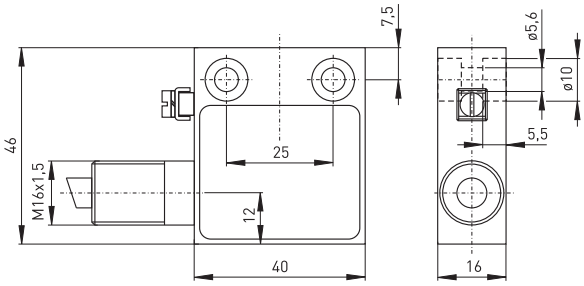

Features/Options
- Actuating speed 0.5 m/s with an actuating angle of 0°

// Plunger

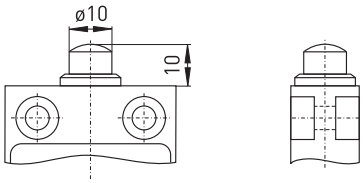

Contact variants: switch travel/contacts

	Snap action
1 change-over contact	Ex 12 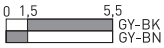

Features/Options
- Actuating speed 0.5 m/s with an actuating angle of 0°
- Collar to protect against the entry of foreign bodies

// Plunger with watertight collar W

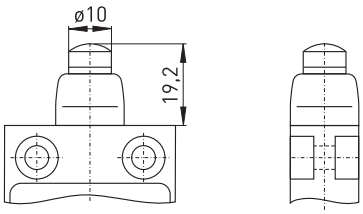

Contact variants: switch travel/contacts

	Snap action
1 change-over contact	Ex 12 W 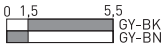

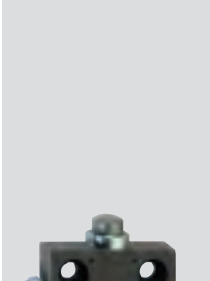

Features/Options
- Actuating speed 0.5 m/s with an actuating angle of 0°

// Plunger for front mounting F

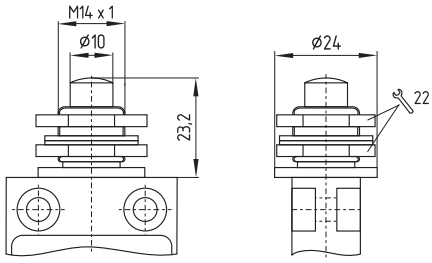

Contact variants: switch travel/contacts

	Snap action
1 change-over contact	Ex 12 F 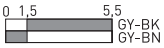

Features/Options
- Actuating speed 0.5 m/s with an actuating angle of 20°
- Can be actuated in line with or from side of switch axis
- Actuator head with captive stainless steel ball actuator
- Exact repeatability of switching point

// Ball plunger KU

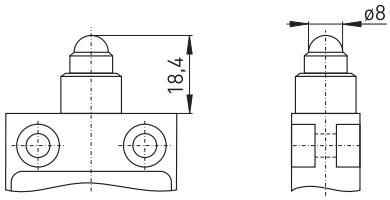

Contact variants: switch travel/contacts

	Snap action
1 change-over contact	Ex 12 KU 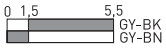

Features/Options
- Actuating speed 0.5 m/s with an actuating angle of 15°
- Can be actuated in line with or from side of switch axis
- Actuator head with captive stainless steel ball actuator
- Exact repeatability of switching point
- Collar to protect against the entry of foreign bodies

// Ball plunger with collar WKU

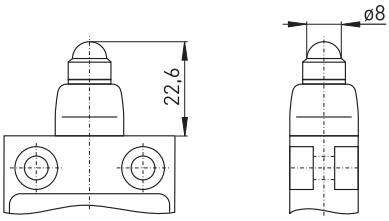

Contact variants: switch travel/contacts

	Snap action
1 change-over contact	Ex 12 WKU 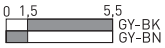

Features/Options
- Actuating speed 0.5 m/s with an actuating angle of 20°
- Can be actuated in line with or from side of switch axis
- Actuator head with captive stainless steel ball actuator
- Ball diameter 8 mm
- Exact repeatability of switching point

// Ball plunger front mounting FKU

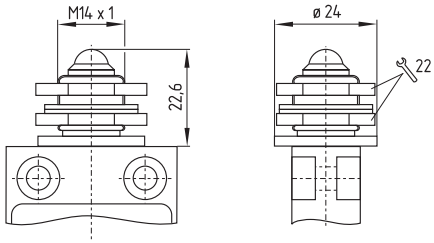

Contact variants: switch travel/contacts

	Snap action
1 change-over contact	Ex 12 FKU 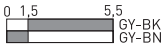

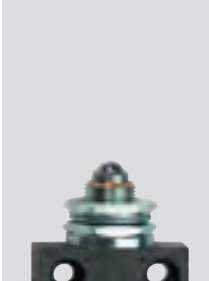

Features/Options
- Actuating speed 0.5 m/s with an actuating angle of 30°
- Metal roller
- Available with actuator repositioned by 90°

// Roller plunger R

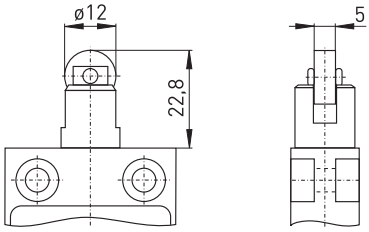

Contact variants: switch travel/contacts

	Snap action
1 change-over contact	Ex 12 R 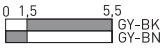

Features/Options
- Actuating speed 0.5 m/s with an actuating angle of 25°
- Metal roller
- Available with actuator repositioned by 90°
- Collar to protect against the entry of foreign bodies

// Roller plunger collar WR

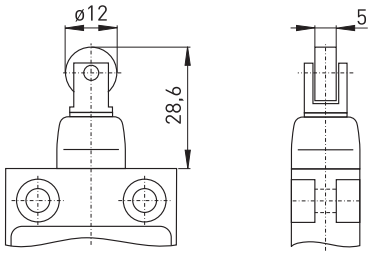

Contact variants: switch travel/contacts

	Snap action
1 change-over contact	Ex 12 WR 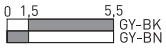

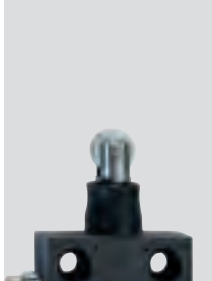

Ex position switches
// Series Ex 12, actuators

Features/Options
- Actuating speed 0.5 m/s with an actuating angle of 25°
- Metal roller
- Available with actuator repositioned by 90°

Features/Options
- Actuating speed 0.5 m/s with an actuating angle of α = 40° and β = 25°
- Metal roller
- Available with actuator repositioned by 180°
- Collar to protect against the entry of foreign bodies
- With plastic roller available on request

Note
Actuation from the left should be avoided since this reduces the mechanical life of the position switch.

// Roller plunger for front mounting FR

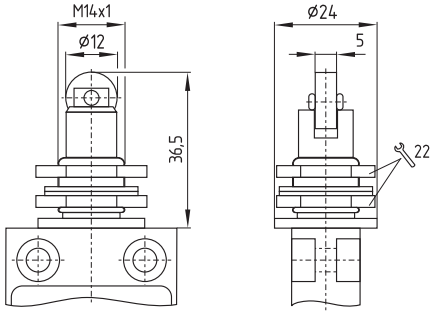

Contact variants: switch travel/contacts

	Snap action
1 change-over contact	Ex 12 FR 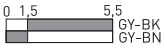

// Lever with collar WH

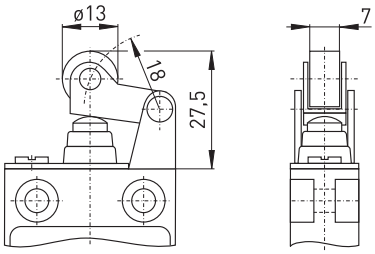

Contact variants: switch travel/contacts

	Snap action
1 change-over contact	Ex 12 WH 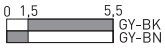

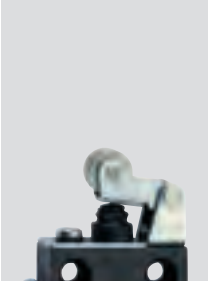

Features/Options
- Actuating speed 0.5 m/s with an actuating angle of α = 40° and β = 30°
- Metal roller
- Available with actuator repositioned by 180°
- Collar to protect against the entry of foreign bodies
- With plastic roller available on request

Features/Options
Actuation from the left should be avoided since this reduces the mechanical life of the position switch.

// Long lever with collar WHL

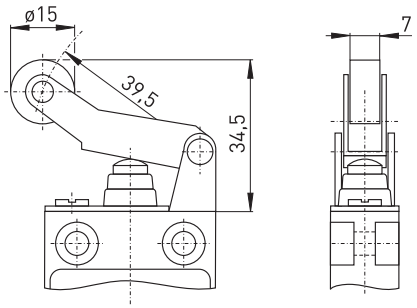

Contact variants: switch travel/contacts

	Snap action
1 change-over contact	Ex 12 WHL 0 4,1 12,8 GY–BK GY–BN

Features/Options
- Actuating speed 0.5 m/s with an actuating angle of α = 40°
- Actuation only possible from right-hand side
- Free movement of actuator from the other side
- Metal roller
- Available with actuator repositioned by 180°
- Collar to protect against the entry of foreign bodies
- With plastic roller available on request

// Rocking roller lever with collar WHK

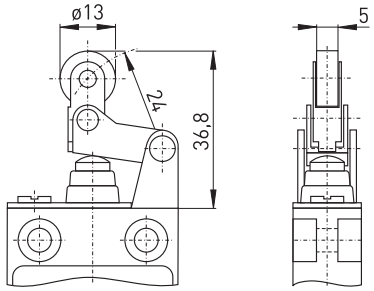

Contact variants: switch travel/contacts

	Snap action
1 change-over contact	Ex 12 WHK 0 2 6,8 GY–BK GY–BN

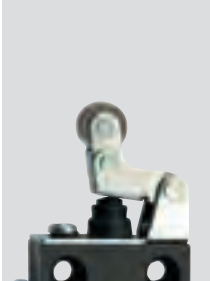

Ex position switches
// Series Ex 12, actuators

Features/Options
- Actuating speed 0.5 m/s with an actuating angle of α = 30°
- Actuation parallel to axis of switch from below
- Metal roller
- Available with actuator repositioned by 180°
- Collar to protect against the entry of foreign bodies
- With plastic roller available on request

Features/Options
- Actuating speed 0.5 m/s with an actuating angle of 45°
- Wear-resistant thermoplastic roller
- Lever can be repositioned in 10° steps clockwise or counter-clockwise
- Actuator can be repositioned by 180°
- With metal roller available on request

// Parallel roller lever with collar WPH

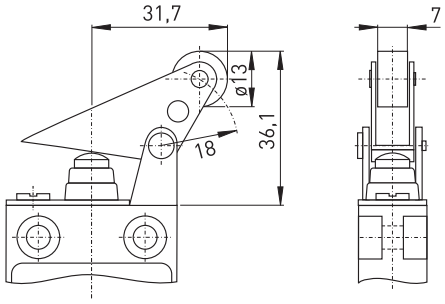

Contact variants: switch travel/contacts

	Snap action
1 change-over contact	Ex 12 WPH 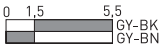

// Roller lever D

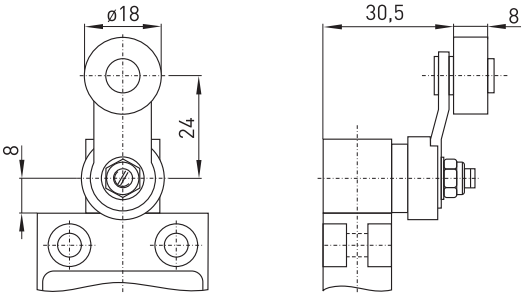

Contact variants: switch travel/contacts

	Snap action
1 change-over contact	Ex 12 D 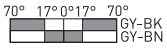

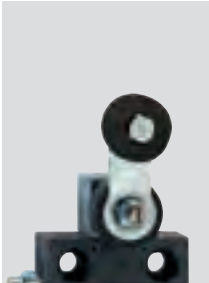

Features/Options
- Actuating speed 0.5 m/s with an actuating angle of 45°
- Wear-resistant thermoplastic roller
- Lever can be repositioned in 10° steps clockwise or counter-clockwise
- Actuator can be repositioned by 180°
- With metal roller available on request

// Long roller lever DL

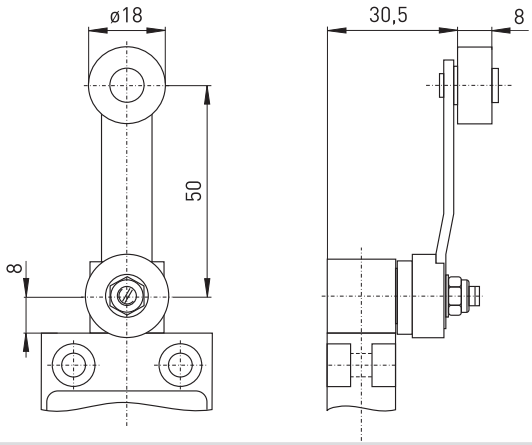

Contact variants: switch travel/contacts

	Snap action
1 change-over contact	Ex 12 DL 70° 17° 0° 17° 70° GY-BK GY-BN

Features/Options
- Actuating speed 0.5 m/s with an actuating angle of 45°
- Wear-resistant thermoplastic roller
- Lever can be repositioned in 10° steps clockwise or counter-clockwise
- Actuator can be repositioned by 180°
- With metal roller available on request

// Adjustable-length roller lever DS

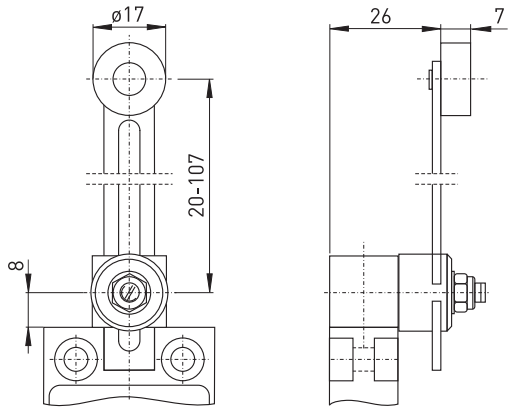

Contact variants: switch travel/contacts

	Snap action
1 change-over contact	Ex 12 DS 70° 17° 0° 17° 70° GY-BK GY-BN

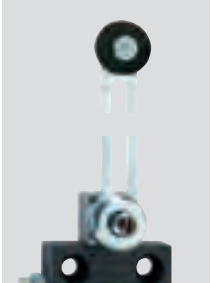

Ex position switches
// Series Ex 12, actuators

Features/Options
- Wear-resistant thermoplastic tip
- Lever can be repositioned in 10° steps clockwise or counter-clockwise
- Available with actuator repositioned by 180°

Features/Options
- Spring rod can be actuated from any direction
- Spring rod can be shortened 30 mm in actuating area
- Exact linear actuation not necessary
- Elasticity of spring allows for deflection above the max. switching angle of 18°

// Spring lever DD

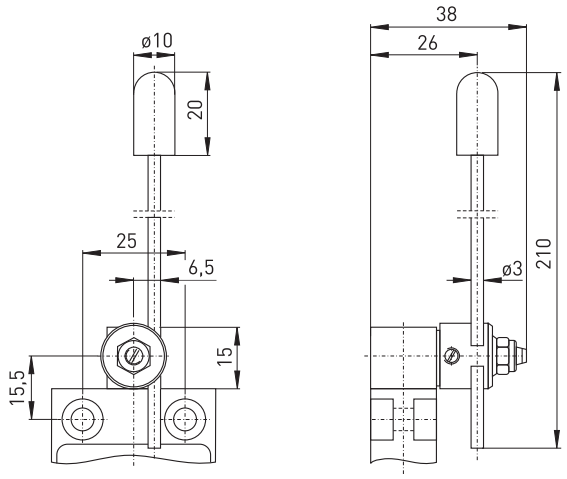

Contact variants: switch travel/contacts

	Snap action
1 change-over contact	Ex 12 DD 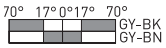

// Long spring rod TL

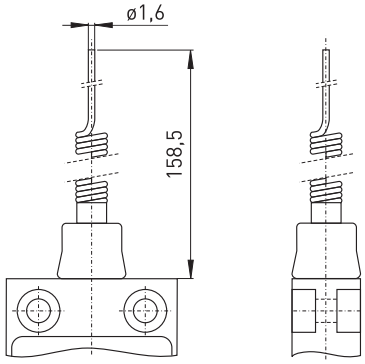

Contact variants: switch travel/contacts

	Snap action
1 change-over contact	Ex 12 TL 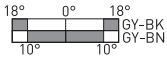

Features/Options
- With rounded steel tip
- Spring rod can be actuated from any direction
- Elasticity of spring allows for deflection above the max. switching angle of 18°

// Spring rod with rounded steel tip TF

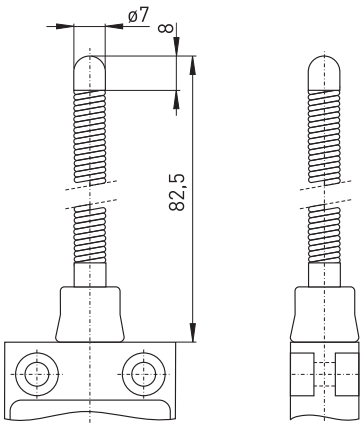

Contact variants: switch travel/contacts

	Snap action
1 change-over contact	Ex 12 TF 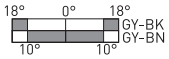

Features/Options
- Wear-resistant plastic tip
- Spring rod can be actuated from any direction
- Elasticity of spring allows for deflection above the max. switching angle of 18°

// Spring rod with plastic tip TK

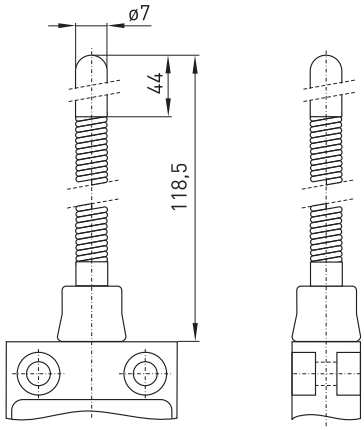

Contact variants: switch travel/contacts

	Snap action
1 change-over contact	Ex 12 TK 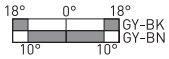

Features/Options
- Ex zone 1 and 21
- Design according to DIN EN 50041
- Available with contact overlapping
- Wiring compartment
- Actuator heads can be repositioned in 4 x 90° steps
- Angle of offset roller lever can be adjusted in 10° steps
- Special version only for dust Ex zone 22 available
- With gold-plated contacts available on request

// EX 335

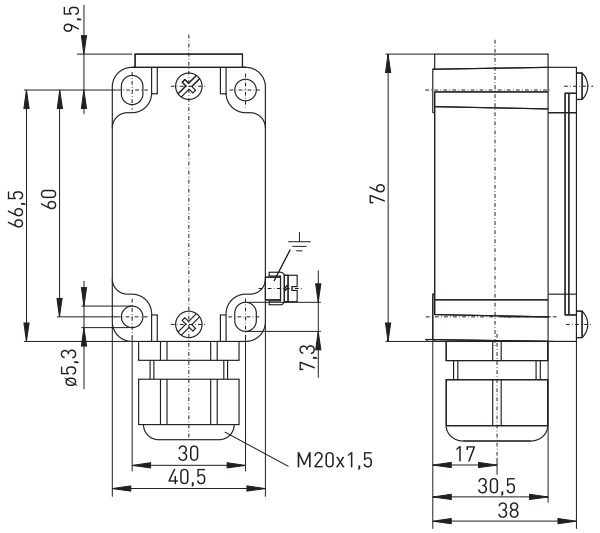

Technical data

Standards	EN 60947-5-1; EN 1088; EN 60079-0, EN 60079-1, EN 60079-7, EN 60079-31; EN ISO 13849-1
Design	DIN EN 50 041
Enclosure	zinc die casting, enamelled
Switch insert	Ex 95
Degree of protection	IP 67 according to EN 60529
Contact material	silver
Switching system	slow action, positive break NC contact ⊖
Switching elements	change-over contact with double break Zb or 2 NC contacts, galvanically separated contact bridges
Connection	M3 screw clamps
Cable section	max. 1.5 mm² (incl. conductor ferrules)
B_{10d} (10 % load)	2 million
T_M	max. 20 years
U_{imp}	4 kV
U_i	250 V
I_{the}	6 A
I_e/U_e	6 A/250 VAC; 0.25 A/230 VDC
Utilisation category	AC-15, DC-13
Max. fuse rating	6 A gL/gG D-fuse
Ambient temperat. Ta	–20 °C ... +60 °C
Mechanical life	> 1 million operations
Switching frequency	1800/h
Repeat accuracy	± 0.1 mm
Contact gap	max. 2 x 3.5 mm
Ex marking	Ⓔx II 2G Ex de IIC T6/T5 Gb, II 2D Ex tb IIIC T80°C/T95°C Db IECEx Ex de IIC T6/T5 Gb, Ex tb IIIC T80°C/T95°C Db
Approvals	DMT 01 ATEX E 178, IECEx BVS 07.0014 X

Type code	Ex 335 S 1Ö/1S-3D

Equipment Categ. 3D, dust Ex zone 22
Contact type 1Ö/1S, (2Ö, UE)
Actuator S (R, 4VH, 4V7H-2138, etc.)
Series
Ex certified component

Ex position switches
// Series Ex 335, actuators

Features/Options
- Actuator type B to DIN EN 50 041
- Actuating speed 0.5 m/s with an actuating angle of α = 0°

Features/Options
- Actuator type C to DIN EN 50 041
- Actuating speed 0.5 m/s with an actuating angle of α = 30°

// Plunger S

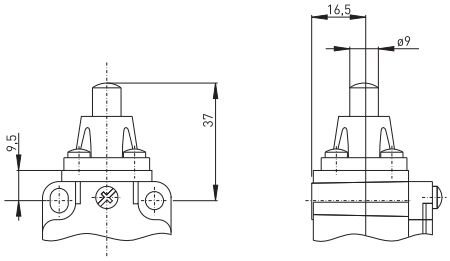

// Roller plunger R

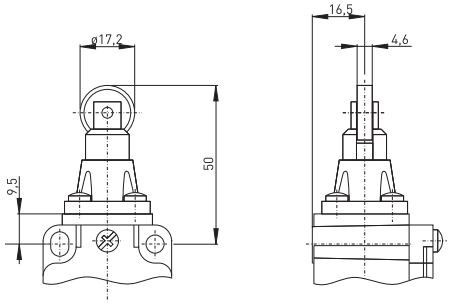

Contact variants: switch travel/contacts

	Slow action
1 NC/1 NO contact	**Ex 335 S 1Ö/1S** 
1 NC/1 NO contact with overlapping	**Ex 335 S UE** 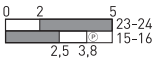
2 NC contacts	**Ex 335 S 2Ö** 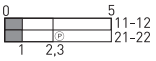

Contact variants: switch travel/contacts

	Slow action
1 NC/1 NO contact	**Ex 335 R 1Ö/1S** 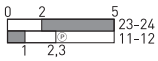
1 NC/1 NO contact with overlapping	**Ex 335 R UE** 
2 NC contacts	**Ex 335 R 2Ö** 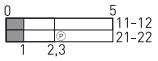

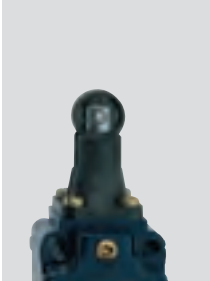

Ex position switches
// Series Ex 335, actuators

Features/Options
- Actuating speed 0.5 m/s with an actuating angle of α = 30°
- Actuation parallel to switch from right
- Wear-resistant thermoplastic roller
- Actuator heads can be repositioned in 4 x 90° steps

Note
Actuation from the left should be avoided since this reduces the mechanical life of the position switch.

Features/Options
- Actuating speed 0.5 m/s with an actuating angle of α = 30°
- Actuation parallel to switch from below
- Wear-resistant thermoplastic roller
- Actuator heads can be repositioned in 4 x 90° steps

// Roller lever 1K

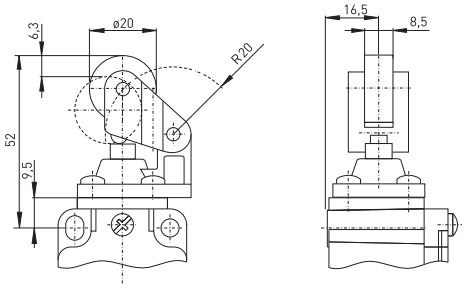

// Angled roller lever 3K

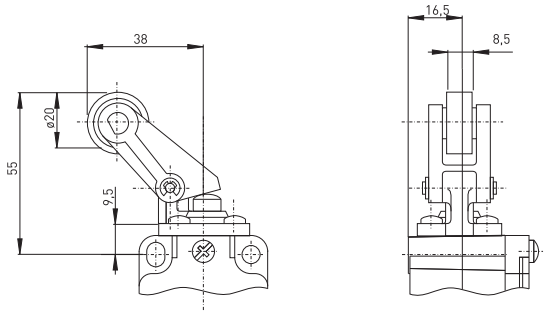

Contact variants: switch travel/contacts

	Slow action
1 NC/1 NO contact	Ex 335 1K 1Ö/1S 
1 NC/1 NO contact with overlapping	Ex 335 1K UE 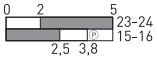
2 NC contacts	Ex 335 1K 2Ö 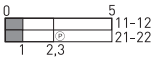

Contact variants: switch travel/contacts

	Slow action
1 NC/1 NO contact	Ex 335 3K 1Ö/1S 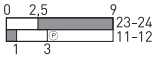
1 NC/1 NO contact with overlapping	Ex 335 3K UE 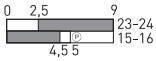
2 NC contacts	Ex 335 3K 2Ö 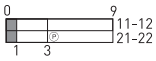

Features/Options
- Actuator type A to DIN EN 50 041
- Actuating speed 2.5 m/s with an actuating angle of α = 30°
- Wear-resistant thermoplastic roller
- Actuator heads can be repositioned in 4 x 90° steps

// Rocking roller lever 4VH

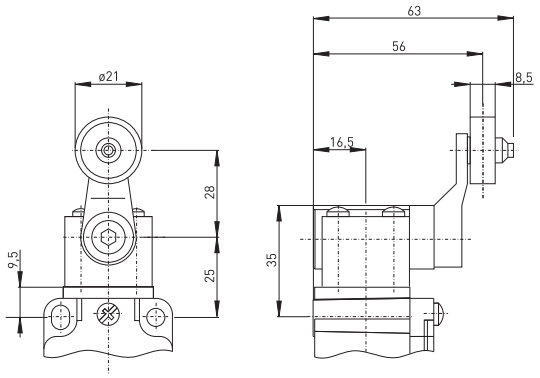

Contact variants: switch travel/contacts

	Slow action
1 NC/1 NO contact	**Ex 335 4VH 1Ö/1S** 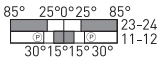
1 NC/1 NO contact with overlapping	**Ex 335 4VH UE** 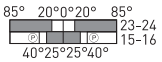
2 NC contacts	**Ex 335 4VH 2Ö** 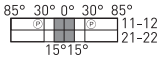

Features/Options
- Actuating speed 2.5 m/s with an actuating angle of α = 30°
- Wear-resistant thermoplastic roller
- Actuator heads can be repositioned in 4 x 90° steps

// Long rocking roller lever 4V3H

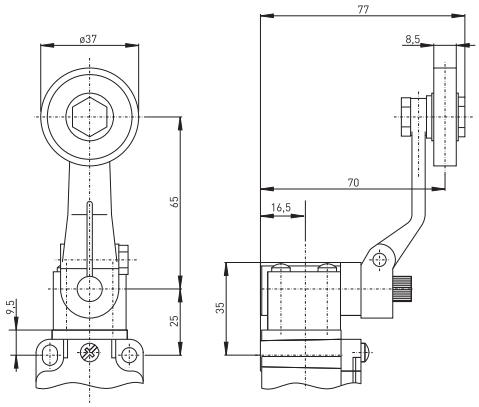

Contact variants: switch travel/contacts

	Slow action
1 NC/1 NO contact	**Ex 335 4V3H 1Ö/1S** 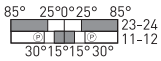
1 NC/1 NO contact with overlapping	**Ex 335 4V3H UE** 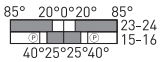
2 NC contacts	**Ex 335 4V3H 2Ö** 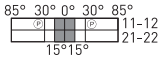

Ex position switches
// Series Ex 335, actuators

Features/Options
- Actuating speed 2.5 m/s with an actuating angle of α = 30°
- Wear-resistant thermoplastic roller
- Actuator heads can be repositioned in 4 x 90° steps
- For safety duties ⊖, positive break, ordering suffix -2138

// Adjustable rocking lever 4V7H

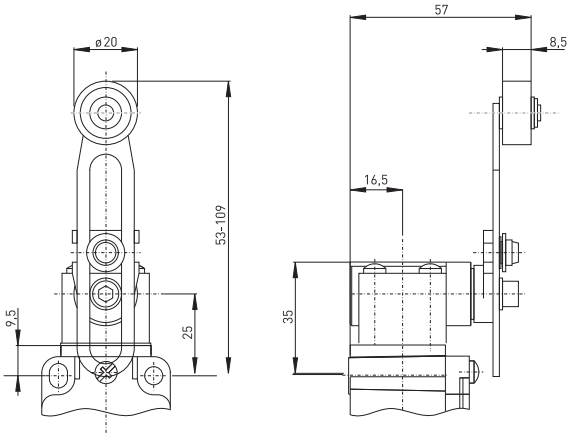

Contact variants: switch travel/contacts

	Slow action
1 NC/1 NO contact	Ex 335 4V7H 1Ö/1S 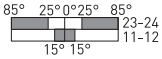
1 NC/1 NO contact with overlapping	Ex 335 4V7H UE 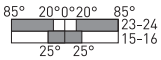
2 NC contacts	Ex 335 4V7H 2Ö 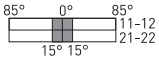

// Forked lever latching 3V4D

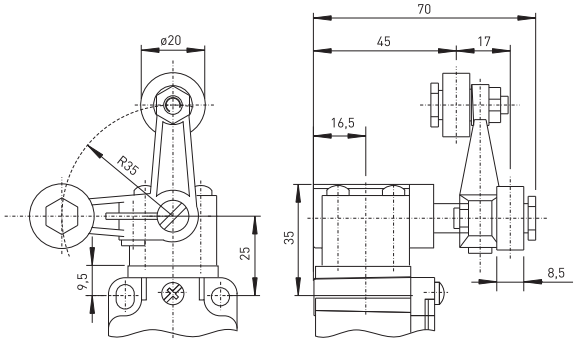

Contact variants: switch travel/contacts

	Slow action
1 NC/1 NO contact	Ex 335 3V4D 1Ö/1S 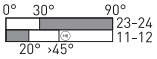
1 NC/1 NO contact with overlapping	Ex 335 3V4D UE 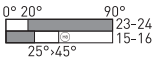
2 NC contacts	Ex 335 3V4D 2Ö 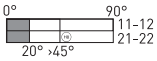

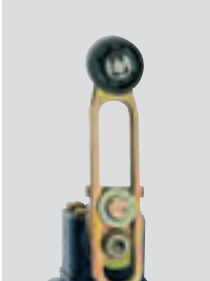

Features/Options
- Actuating speed 2.5 m/s with an actuating angle of α = 30°
- Actuator type D to EN 50041

// Rod lever 4V10H

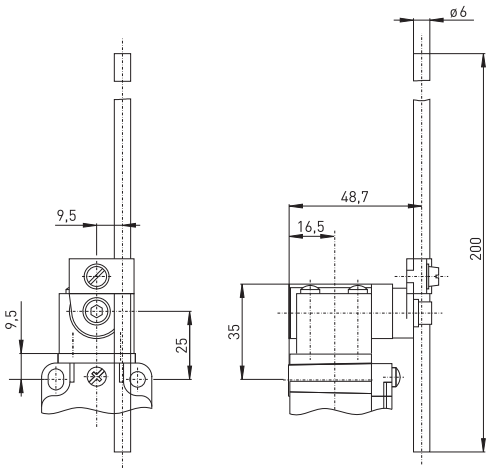

Contact variants: switch travel/contacts

	Slow action
1 NC/1 NO contact	**Ex 335 4V10H 1Ö/1S** 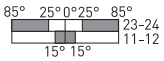
1 NC/1 NO contact with overlapping	**Ex 335 4V10H UE** 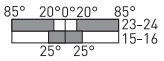
2 NC contacts	**Ex 335 4V10H 2Ö** 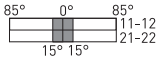

Features/Options
- Wear-resistant plastic tip
- Spring rod can be actuated from any direction
- Elasticity of spring allows for deflection above the max. switching angle of 12°

// Spring rod with plastic tip TK

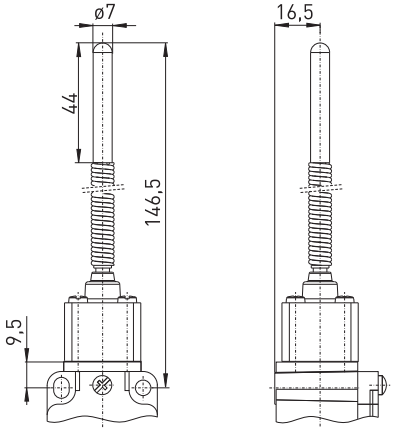

Contact variants: switch travel/contacts

	Slow action
1 NC/1 NO contact	**Ex 335 TK 1Ö/1S** 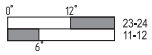
2 NC contacts	**Ex 335 TK 2Ö** 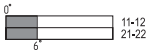

Features/Options
- Ex zone 1 and 21
- Mounting and switching details to EN 50041
- 3 cable entries
- Actuating elements can be repositioned by 4 x 90°
- Rocking lever can be positioned in 10° steps
- Special version only for dust Ex zone 22
- With gold-plated contacts available on request

// EX 355

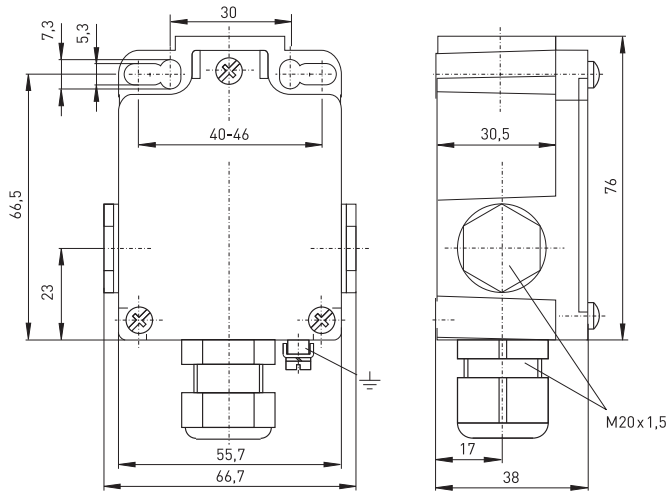

Technical data

Standards	EN 60947-5-1; EN 1088; EN 60079-0, EN 60079-1, EN 60079-7, EN 60079-31; EN ISO 13849-1
Design	mounting dimensions and switching points to DIN EN 50 041
Enclosure	zinc die casting, enamelled
Switch insert	Ex 95
Degree of protection	IP 67 according to EN 60529
Contact material	silver
Switching system	slow action, positive break NC contact ⊖
Switching elements	change-over contact with double break Zb or 2 NC contacts, galvanically separated contact bridges
Connection	M3 screw clamps
Cable section	max. 1.5 mm² (incl. conductor ferrules)
B_{10d} (10 % load)	2 million
T_M	max. 20 years
U_{imp}	4 kV
U_i	250 V
I_{the}	6 A
I_e/U_e	6 A/250 VAC; 0.25 A/230 VDC
Utilisation category	AC-15, DC-13
Max. fuse rating	6 A gL/gG D-fuse
Ambient temperat. Ta	–20 °C ... +60 °C
Mechanical life	> 1 million operations
Switching frequency	1800/h
Repeat accuracy	± 0.1 mm
Contact gap	max. 2 x 3.5 mm
Ex marking	Ⓔx II 2G Ex de IIC T6/T5 Gb, II 2D Ex tb IIIC T80°C/T95°C Db IECEx Ex de IIC T6/T5 Gb, Ex tb IIIC T80°C/T95°C Db
Approvals	BVS 04 ATEX E 126, IECEx BVS 07.0013

Type code	Ex 355 S 1Ö/1S-3D

Equipment Categ. 3D, dust Ex zone 22
Contact type 1Ö/1S, (2Ö, UE)
Actuator S (R, 4VH, 4V7H-2138, etc.)
Series
Ex certified component

Features/Options
- Actuator type B to DIN EN 50 041
- Actuating speed 0.5 m/s with an actuating angle of α = 0°

// Plunger S

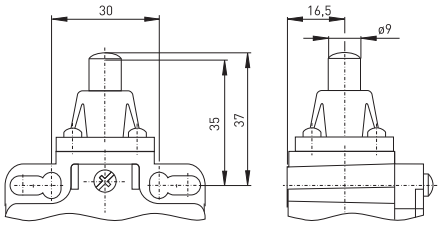

Contact variants: switch travel/contacts

	Slow action
1 NC/1 NO contact	**Ex 355 S 1Ö/1S** 
1 NC/1 NO contact with overlapping	**Ex 355 S UE** 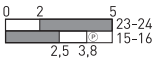
2 NC contacts	**Ex 355 S 2Ö** 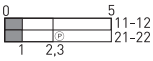

Features/Options
- Actuator type C to DIN EN 50 041
- Actuating speed 0.5 m/s with an actuating angle of α = 30°

// Roller plunger R

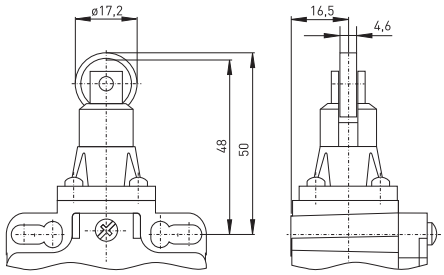

Contact variants: switch travel/contacts

	Slow action
1 NC/1 NO contact	**Ex 355 R 1Ö/1S** 
1 NC/1 NO contact with overlapping	**Ex 355 R UE** 
2 NC contacts	**Ex 355 R 2Ö** 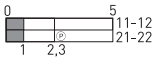

Ex position switches
// Series Ex 355, actuators

Features/Options
- Actuating speed 0.5 m/s with an actuating angle of α = 30°
- Actuation parallel to switch from right
- Wear-resistant thermoplastic roller
- Actuator heads can be repositioned in 4 x 90° steps

Note
Actuation from the left should be avoided since this reduces the mechanical life of the position switch.

Features/Options
- Actuating speed 0.5 m/s with an actuating angle of α = 30°
- Actuation parallel to switch from below
- Wear-resistant thermoplastic roller
- Actuator heads can be repositioned in 4 x 90° steps

// Roller lever 1K

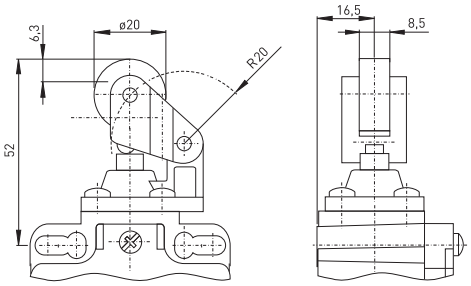

// Angled roller lever 3K

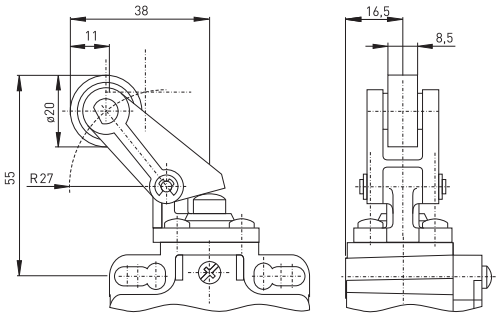

Contact variants: switch travel/contacts

	Slow action
1 NC/1 NO contact	Ex 355 1K 1Ö/1S 
1 NC/1 NO contact with overlapping	Ex 355 1K UE 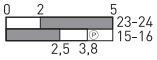
2 NC contacts	Ex 355 1K 2Ö 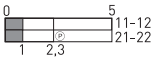

Contact variants: switch travel/contacts

	Slow action
1 NC/1 NO contact	Ex 355 3K 1Ö/1S 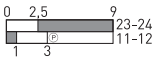
1 NC/1 NO contact with overlapping	Ex 355 3K UE 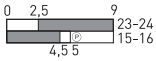
2 NC contacts	Ex 355 3K 2Ö 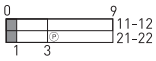

Features/Options
- Actuator type A to DIN EN 50 041
- Actuating speed 2.5 m/s with an actuating angle of α = 30°
- Wear-resistant thermoplastic roller
- Actuator heads can be repositioned in 4 x 90° steps

// Rocking roller lever 4VH

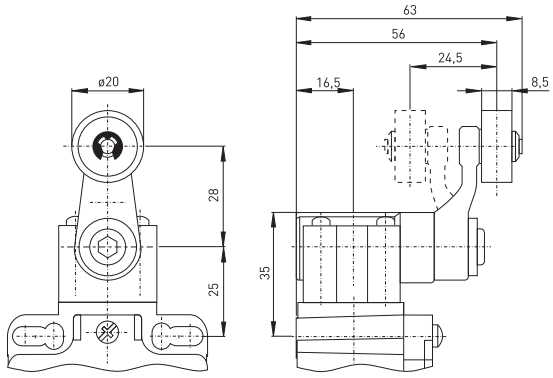

Contact variants: switch travel/contacts

	Slow action
1 NC/1 NO contact	**Ex 355 4VH 1Ö/1S** 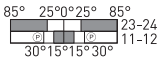
1 NC/1 NO contact with overlapping	**Ex 355 4VH UE** 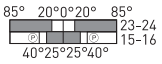
2 NC contacts	**Ex 355 4VH 2Ö** 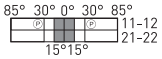

Features/Options
- Actuating speed 2.5 m/s with an actuating angle of α = 30°
- Wear-resistant thermoplastic roller
- Actuator heads can be repositioned in 4 x 90° steps

// Long rocking roller lever 4V3H

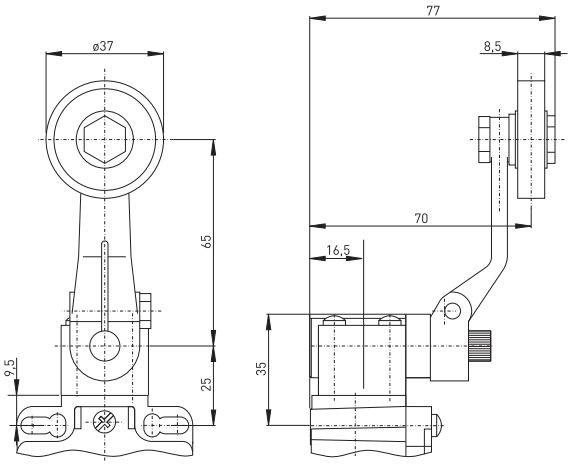

Contact variants: switch travel/contacts

	Slow action
1 NC/1 NO contact	**Ex 355 4V3H 1Ö/1S** 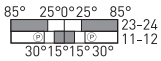
1 NC/1 NO contact with overlapping	**Ex 355 4V3H UE** 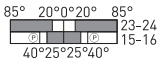
2 NC contacts	**Ex 355 4V3H 2Ö** 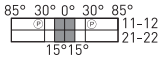

Ex position switches
// Series Ex 355, actuators

Features/Options
- Actuating speed 2.5 m/s with an actuating angle of α = 30°
- Wear-resistant thermoplastic roller
- Actuator heads can be repositioned in 4 x 90° steps
- For safety duties ⊖, positive break, ordering suffix -2138

// Adjustable rocking lever 4V7H

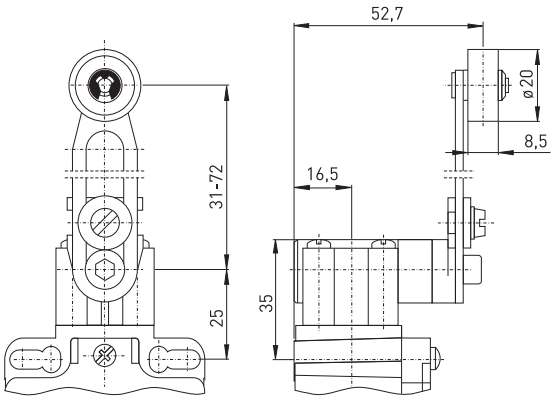

Contact variants: switch travel/contacts

	Slow action
1 NC/1 NO contact	Ex 355 4V7H 1Ö/1S 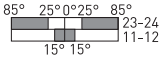
1 NC/1 NO contact with overlapping	Ex 355 4V7H UE 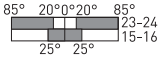
2 NC contacts	Ex 355 4V7H 2Ö 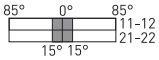

// Forked lever latching 3V4D

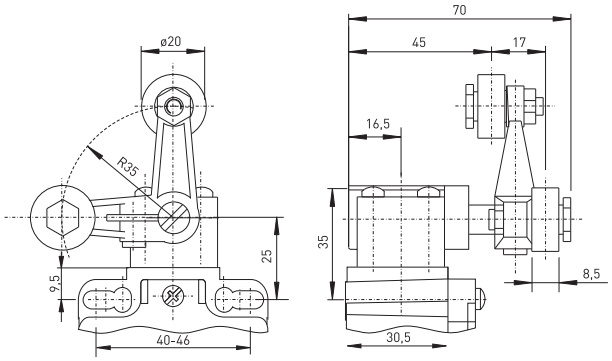

Contact variants: switch travel/contacts

	Slow action
1 NC/1 NO contact	Ex 355 3V4D 1Ö/1S 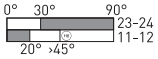
1 NC/1 NO contact with overlapping	Ex 355 3V4D UE 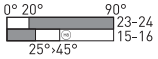
2 NC contacts	Ex 355 3V4D 2Ö 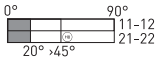

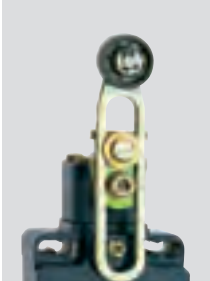

Features/Options
- Actuating speed 2.5 m/s with an actuating angle of α = 30°
- Actuator type D to EN 50041

// Rod lever 4V10H

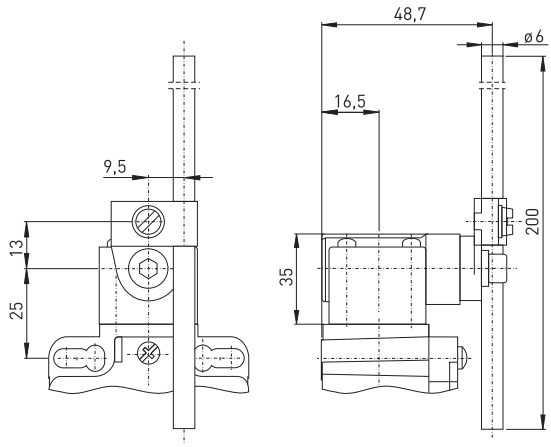

Contact variants: switch travel/contacts

	Slow action
1 NC/1 NO contact	**Ex 355 4V10H 1Ö/1S** 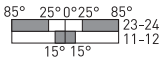
1 NC/1 NO contact with overlapping	**Ex 355 4V10H UE** 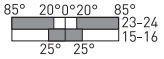
2 NC contacts	**Ex 355 4V10H 2Ö** 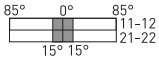

Features/Options
- Wear-resistant plastic tip
- Spring rod can be actuated from any direction
- Elasticity of spring allows for deflection above the max. switching angle of 12°

// Spring rod with plastic tip TK

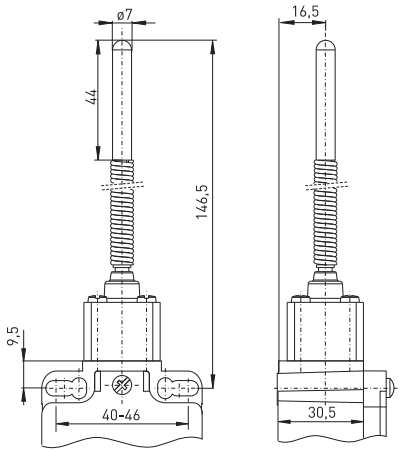

Contact variants: switch travel/contacts

	Slow action
1 NC/1 NO contact	**Ex 355 TK 1Ö/1S** 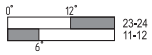
2 NC contacts	**Ex 355 TK 2Ö** 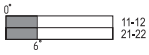

Features/Options
- Ex zone 1 and 21
- Metal enclosure
- Pre-wired cable available in various lengths
- Available with actuator heads repositioned by 4 x 90°
- Special version only for dust Ex zone 22 available

// EX/EXM 61

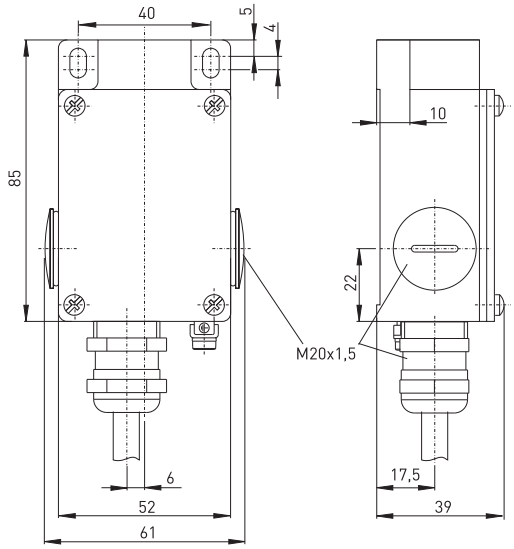

Technical data

Standards	EN 60947-5-1; EN 1088; EN 60079-0, EN 60079-1, EN 60079-31; EN ISO 13849-1
Enclosure	aluminium die casting, enamelled
Cover	steel, enamelled
Switch insert	Ex 14, ExM 14
Degree of protection	IP 65 according to EN 60529
Contact material	silver
Switching system	snap or slow action, positive break NC contact ⊖
Switching elements	ExM 61: change-over contact with single break, Form C, Ex 61: change-over contact with double break Zb, galvanically separated contact bridges
Connection	cable H05VV-F, 3/4 x 0.75 mm²
Cable length	3 m
B_{10d} (10 % load)	Ex 61: 2 million
T_M	max. 20 years
U_{imp}	4 kV
U_i	250 V
I_{the}	T6: 6 A; T5: 3 A
I_e/U_e	6 A/250 VAC; 0.25 A/230 VDC
Utilisation category	AC-15, DC-13
Max. fuse rating	6 A gL/gG D-fuse
Ambient temperat. Ta	T6: –20 °C ... + 65 °C; T5: –20 °C ... +95 °C
Mechanical life	> 1 million operations
Schaltfrequenz	1800/h
Repeat accuracy	± 0.1 mm
Contact gap	max. 2 x 4.5 mm
Ex marking	Ⓔx II 2G Ex d IIC T6/T5, II 2D Ex tb IIIC T80°C/T95°C IECEx Ex d IIC T6/T5 Gb, Ex tb IIIC T80°C/T95°C
Approvals	Ex 61: PTB 03 ATEX 1070 X*; IECEx PTB 06.0098X* ExM 61: PTB 03 ATEX 1069 X* *referring to the switch insert

Type code	Ex M 61 W 1Ö/1S

Contact type 1Ö/1S
Actuator W (WH, WHL, WPH, etc. ...)
Series
Snap action
Ex certified component

Features/Options
- Actuating speed 0.5 m/s with an actuating angle of 15°
- Exact repeatability of switching point
- Collar to protect against the entry of foreign bodies

Features/Options
- Actuating speed 0.5 m/s with an actuating angle of α = 40° and β = 25°
- Wear-resistant thermoplastic roller
- Available with actuator repositioned by 4 x 90°
- Collar to protect against the entry of foreign bodies
- With metal roller available on request

Note
Actuation from the left should be avoided since this reduces the mechanical life of the position switch.

// Plunger W

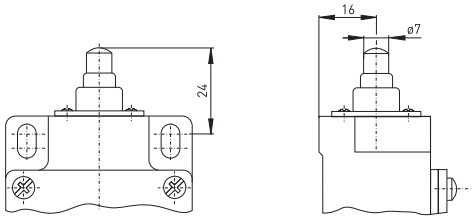

Contact variants: switch travel/contacts

	Snap action	Slow action
1 NC/1 NO contact	ExM 61 W 0 2 5,5 GY-BK GY-BN	Ex 61 W 1Ö/1S 0 3,5 5,5 BK-GY BN-BU 2

// Roller lever with collar WH

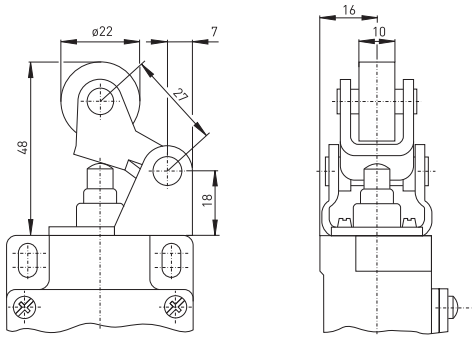

Contact variants: switch travel/contacts

	Snap action	Slow action
1 NC/1 NO contact	ExM 61 WH 0 2 5,5 GY-BK GY-BN	Ex 61 WH 1Ö/1S 0 3,5 5,5 BK-GY BN-BU 2

Ex position switches
// Series Ex/ExM 61, actuators

Features/Options
- Actuating speed 0.5 m/s with an actuating angle of α = 30°
- Wear-resistant thermoplastic roller
- Available with actuator repositioned by 4 x 90°
- Collar to protect against the entry of foreign bodies
- With metal roller available on request

Note
Actuation from the left should be avoided since this reduces the mechanical life of the position switch.

Features/Options
- Actuating speed 0.5 m/s with an actuating angle of α and β = 40°
- Actuation only possible from right-hand side
- Free movement of actuator from the other side
- Wear-resistant thermoplastic roller
- Actuator heads can be repositioned in 4 x 90° steps
- Collar to protect against the entry of foreign bodies
- With metal roller available on request

// Long roller lever with collar WHL

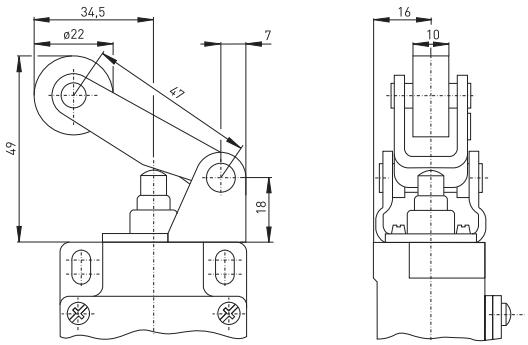

Contact variants: switch travel/contacts

	Snap action	Slow action
1 NC/1 NO contact	ExM 61 WHL 0 3,5 11,5 GY-BK GY-BN	Ex 61 WHL 1Ö/1S 0 7 11,5 BK-GY BN-BU 3,5

// Rocking roller lever WHK

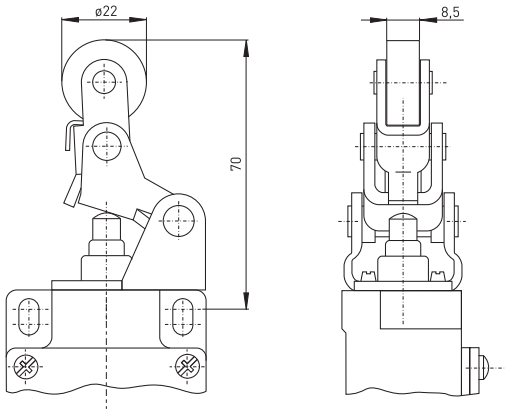

Contact variants: switch travel/contacts

	Snap action	Slow action
1 NC/1 NO contact	ExM 61 WHK 0 2,5 7,5 GY-BK GY-BN	Ex 61 WHK 1Ö/1S 0 5 7,5 BK-GY BN-BU 2,5

Features/Options
- Actuating speed 0.5 m/s with an actuating angle of α = 30°
- Actuation parallel to switch from below
- Wear-resistant thermoplastic roller
- Available with actuator repositioned by 4 x 90°
- Collar to protect against the entry of foreign bodies
- With metal roller available on request

// Parallel roller lever with collar WPH

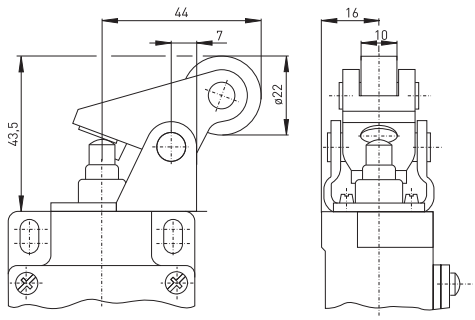

Contact variants: switch travel/contacts

	Snap action	Slow action
1 NC/1 NO contact	ExM 61 WPH 0 1,5 5 GY-BK GY-BN	Ex 61 WPH 1Ö/1S 0 3 5 BK-GY BN-BU 1,5

Features/Options
- Actuating speed 0.5 m/s with an actuating angle of 45°
- Wear-resistant thermoplastic roller
- Lever can be repositioned in 10° steps clockwise or counter-clockwise
- Actuator can be repositioned by 180°
- With metal roller available on request

// Roller lever D

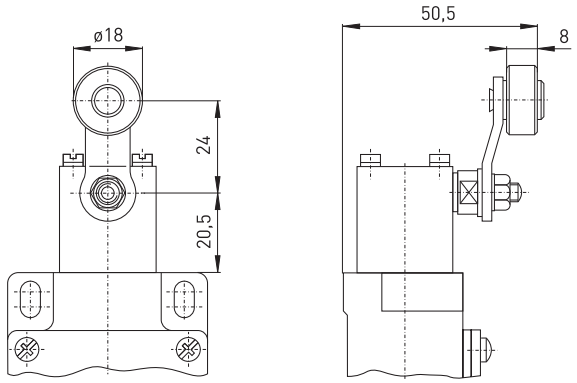

Contact variants: switch travel/contacts

	Snap action	Slow action
1 NC/1 NO contact	ExM 61 D 70° 15° 0° 15° 70° GY-BK GY-BN	Ex 61 D 1Ö/1S 70° 35° 0° 35° 70° BK-GY BN-BU 15° 15°

Ex position switches
// Series Ex/ExM 61, actuators

Features/Options
- Actuating speed 0.5 m/s with an actuating angle of 45°
- Wear-resistant thermoplastic roller
- Lever can be repositioned in 10° steps clockwise or counter-clockwise
- Actuator can be repositioned by 180°
- With metal roller available on request

// Long roller lever DL

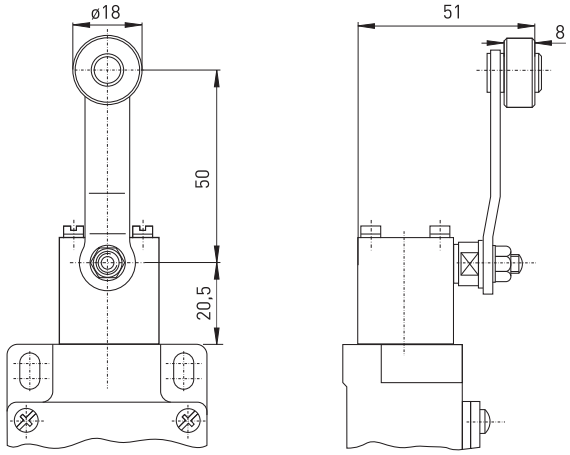

Contact variants: switch travel/contacts

	Snap action	Slow action
1 NC/1 NO contact	ExM 61 DL 70° 15° 0° 15° 70° GY-BK GY-BN	Ex 61 DL 1Ö/1S 70° 35° 0° 35° 70° BK-GY BN-BU 15° 15°

Features/Options
- Actuating speed 0.5 m/s with an actuating angle of 45°
- Wear-resistant thermoplastic roller
- Lever can be repositioned in 10° steps clockwise or counter-clockwise
- Actuator can be repositioned by 180°
- With metal roller available on request

// Adjustable-length roller lever DS

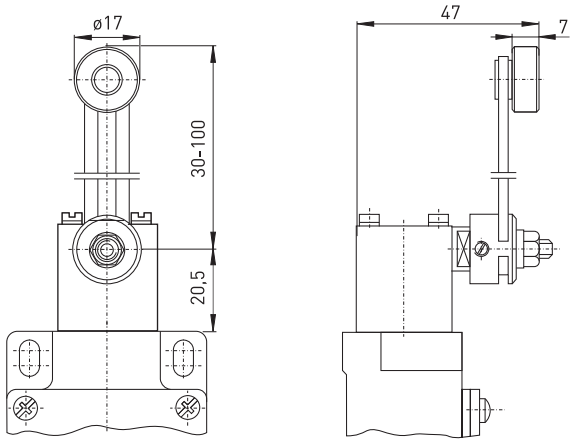

Contact variants: switch travel/contacts

	Snap action	Slow action
1 NC/1 NO contact	ExM 61 DS 70° 15° 0° 15° 70° GY-BK GY-BN	Ex 61 DS 1Ö/1S 70° 35° 0° 35° 70° BK-GY BN-BU 15° 15°

Features/Options
- Spring rod can be actuated from any direction
- Spring rod can be shortened 30 mm in actuating area
- Exact linear actuation not necessary
- Elasticity of spring allows for deflection above the max. switching angle

// Long spring rod TL

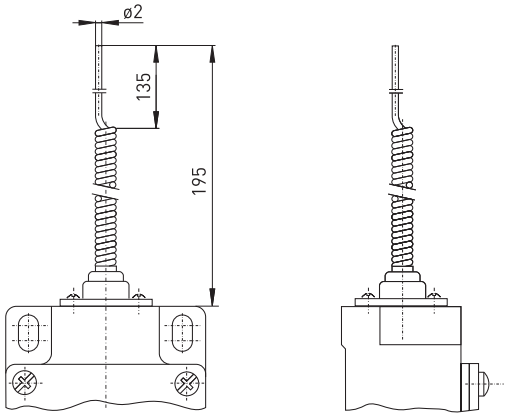

Contact variants: switch travel/contacts

	Snap action	Slow action
1 NC/1 NO contact	ExM 61 TL 10° 0° 10° GY-BK GY-BN	Ex 61 TL 1Ö/1S 20° 0° 20° BK-GY BN-BU 10° 10°

Features/Options
- With rounded steel tip
- Spring rod can be actuated from any direction
- Elasticity of spring allows for deflection above the max. switching angle

// Spring rod with rounded steel tip TF

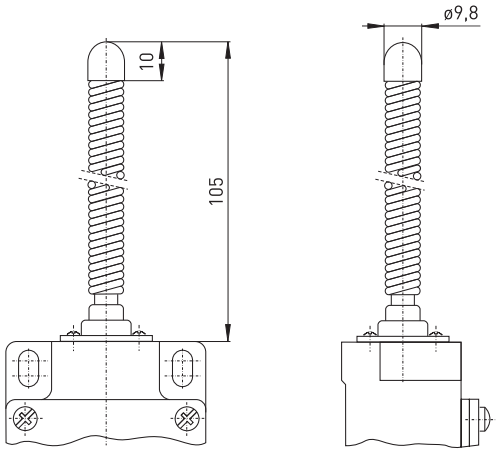

Contact variants: switch travel/contacts

	Snap action	Slow action
1 NC/1 NO contact	ExM 61 TF 10° 0° 10° GY-BK GY-BN	Ex 61 TF 1Ö/1S 20° 0° 20° BK-GY BN-BU 10° 10°

Ex position switches
// Series Ex/ExM 61, actuators

Features/Options
- With rounded steel tip
- Spring rod can be actuated from any direction
- Elasticity of spring allows for deflection above the max. switching angle

Features/Options
- Wear-resistant plastic tip
- Spring rod can be actuated from any direction
- Elasticity of spring allows for deflection above the max. switching angle

// Long spring rod rounded steel tip TFL

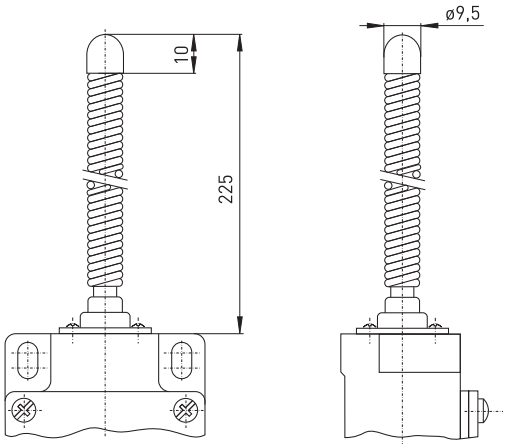

Contact variants: switch travel/contacts

	Snap action	Slow action
1 NC/1 NO contact	ExM 61 TFL 10° 0° 10° GY-BK GY-BN	Ex 61 TFL 1Ö/1S 20° 0° 20° BK-GY BN-BU 10° 10°

// Spring rod with plastic tip TK

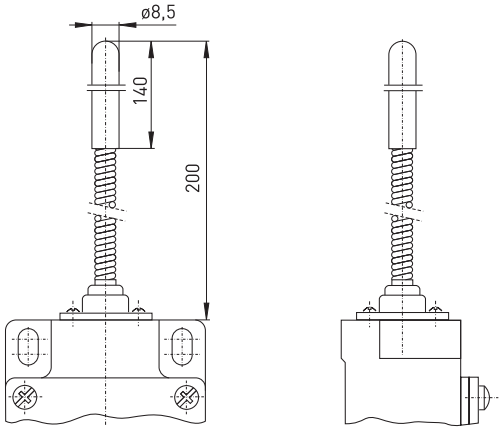

Contact variants: switch travel/contacts

	Snap action	Slow action
1 NC/1 NO contact	ExM 61 TK 10° 0° 10° GY-BK GY-BN	Ex 61 TK 1Ö/1S 20° 0° 20° BK-GY BN-BU 10° 10°

FIXING THE GROUND SCREW

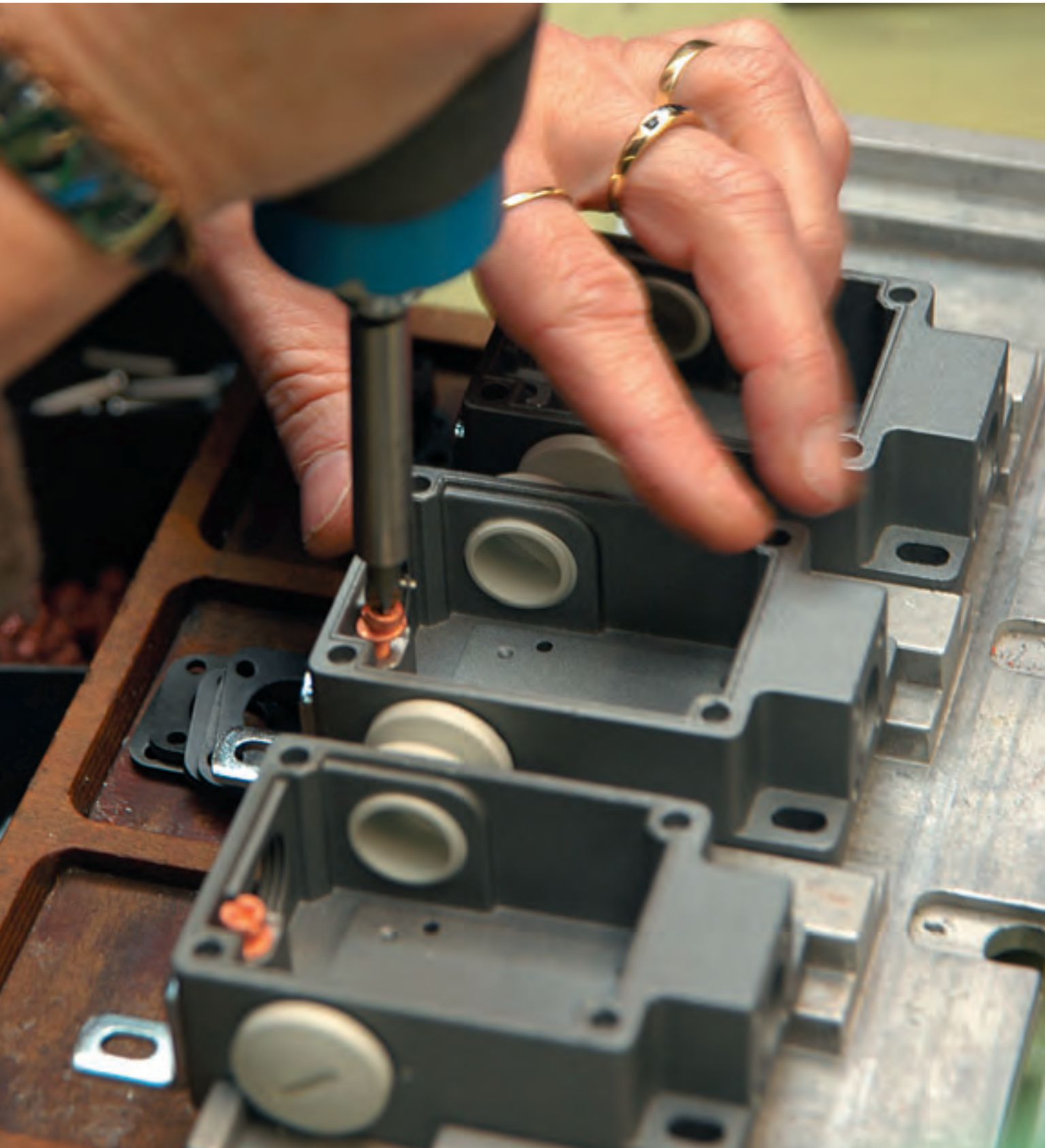


steute

Ex belt-alignment switches

Ex ZS 73 SR

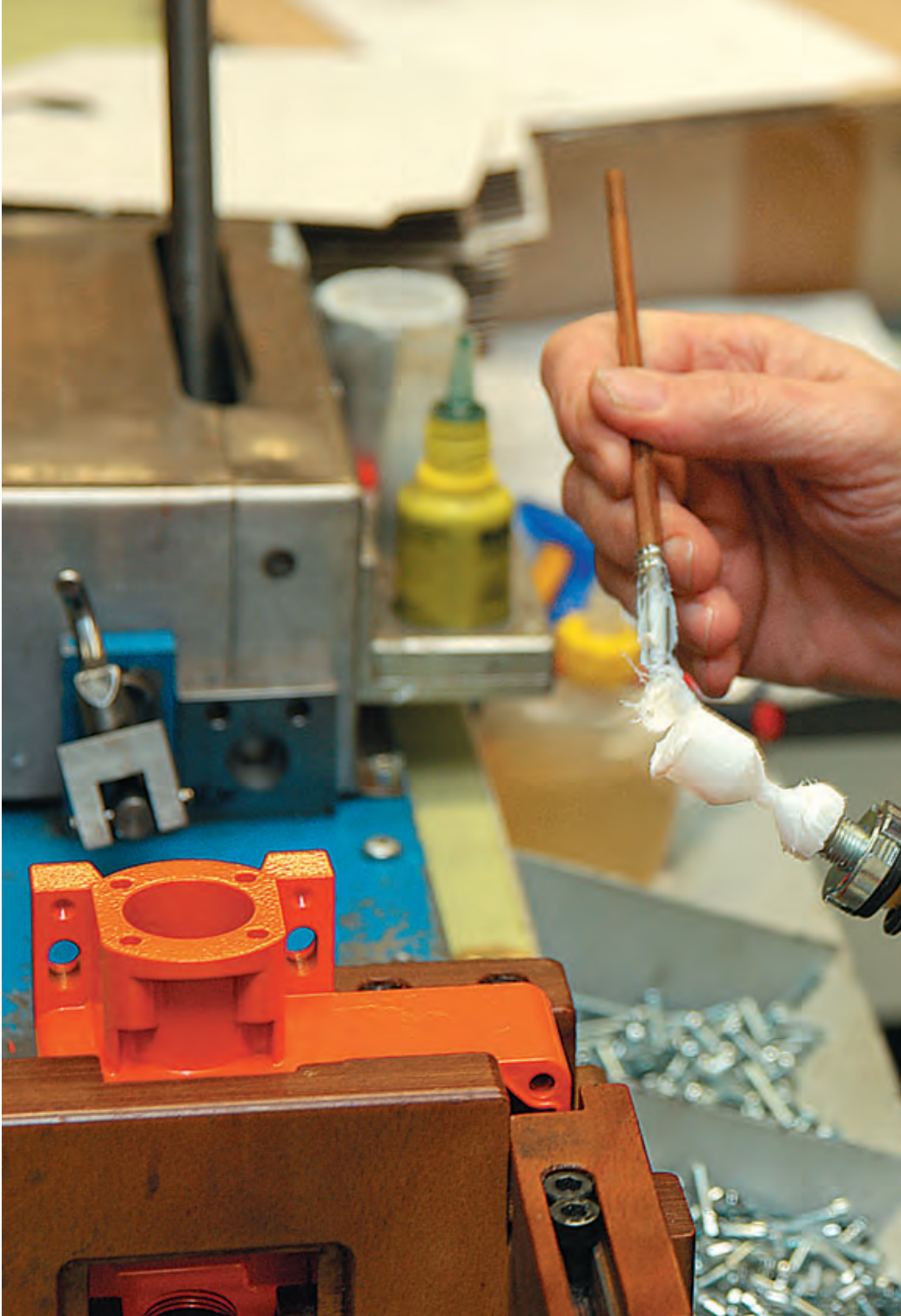

Ex belt-alignment switches

Range of application

Ex belt-alignment switches are suitable for applications with handling equipment. Here they are installed e.g. at both sides of a conveyor belt in order to monitor the misalignment of the belt.

Ex belt misalignment, evoked by, for example, goods not in the middle of conveyor belt positioned or pollution of track idlers and deflection pulleys, can without any monitoring measurements lead to damage, destruction, material covering and dropping.

Design and operating principle

Ex belt-alignment switches are actuated when the conveyor belt becomes misaligned. Depending on the plant arrangements, this signal can either be used to switch the equipment off or to provide automatic correction of the belt alignment. Thus they should be installed at both sides of the conveyor belt close to the deflection and drive pulleys. In the case of very long conveyor systems, further belt-alignment switches must be installed.

These are actuated with the misalignment of the conveyor belt. This signal can either switch the system off or start an automatic belt position correction, as well as at the same time generate an optical or acoustic indicating or warning signal. All Ex belt-alignment switches have positive break NC contacts and mechanical latching. At actuation the NC contacts are opened and latched mechanically. The release can be carried either by push button or by key. Thus an unintentional, automatic restart of the conveyor belt is prevented.

All belt-alignment switches bear the CE mark according to the Machinery Directive 2006/42/EC and to ATEX 94/9/EC. The Ex belt-alignment switches per equipment category 3D bear the CE mark without the number of the notified body and have received a CE declaration of manufacturer conformity.

Application

Monitoring a conveyor belt

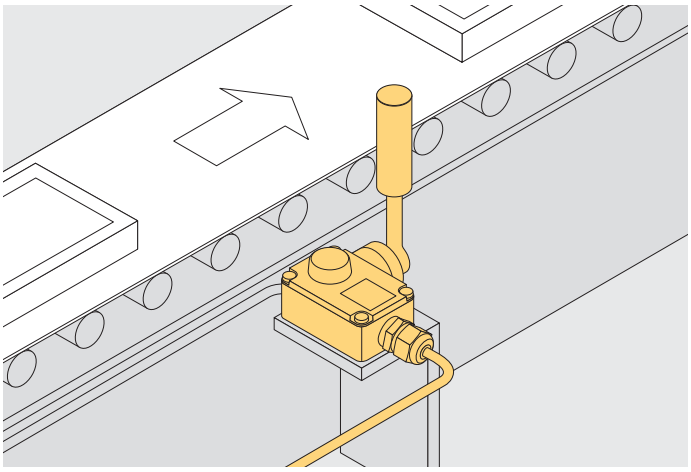

Belt-alignment switch in actuated state

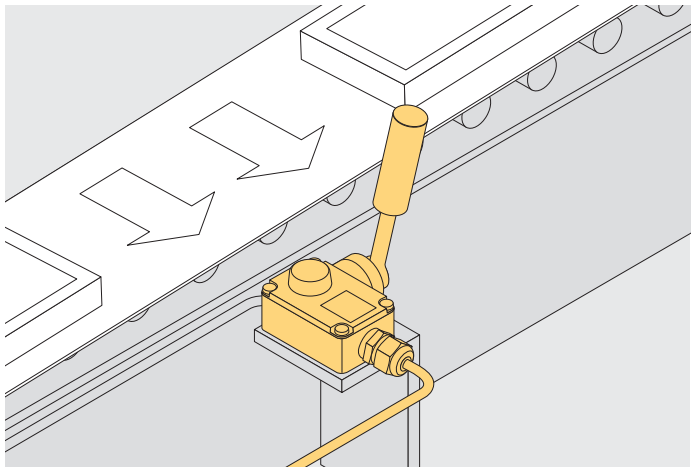

Ex belt-alignment switches
// Series Ex 335 4VSR

Features/Options
- Ex zone 1 and 21
- Metal enclosure
- 2 contacts
- Mounting details to DIN EN 50 041
- Wiring compartment
- Adjustable-length rod lever with nylon roller
- For light- and medium-heavy applications
- Special version only for dust Ex zone 22 available

// EX 335 4VSR

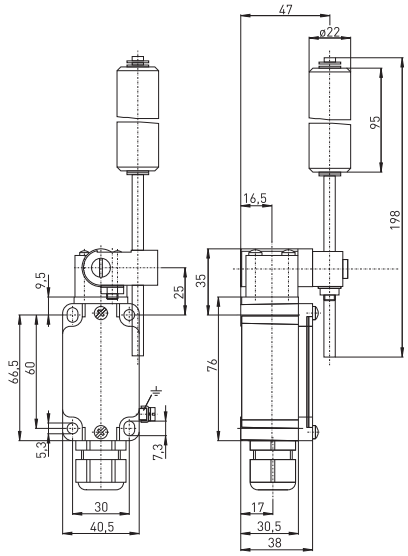

Technical data

Standards	EN 60947-5-1; EN 1088; EN 60079-0, EN 60079-1, EN 60079-7, EN 60079-31; EN ISO 13849-1
Enclosure	zinc die casting, enamelled
Switch insert	Ex 95
Degree of protection	IP 67 according to EN 60529
Contact material	silver
Switching system	slow action, positive break NC contact ⊖
Switching elements	change-over contact with double break Zb or 2 NC contacts, galvanically separated contact bridges
Connection	M3 screw clamps
Cable section	max. 1.5 mm² (incl. conductor ferrules)
B_{10d} (10 % load)	2 million
T_M	max. 20 years
U_{imp}	4 kV
U_i	250 V
I_{the}	6 A
I_e/U_e	6 A/250 VAC; 0.25 A/230 VDC
Utilisation category	AC-15, DC-13
Max. fuse rating	6 A gL/gG D-fuse
Ambient temperat. Ta	–20 °C ... +60 °C
Mechanical life	> 1 million operations
Switching frequency	1800/h
Repeat accuracy	± 0.1 mm
Contact gap	max. 2 x 3.5 mm
Ex marking	Ⓔx II 2G Ex de IIC T6/T5 Gb, II 2D Ex tb IIIC T80°C/T95°C Db IECEx Ex de IIC T6/T5 Gb, Ex tb IIIC T80°C/T95°C Db
Approvals	DMT 01 ATEX E 178, IECEx BVS 07.0014

Contact variants: switch travel/contacts

	Slow action
1 NC/1 NO contact	**Ex 335 4VSR 1Ö/1S** 85° 25°0°25° 85° 23-24 11-12 30°15°15°30°
1 NC/1 NO contact with overlapping	**Ex 335 4VSR UE** 85° 20°0°20° 85° 23-24 15-16 40°25°25°40°
2 NC contacts	**Ex 335 4VSR 2Ö** 85° 30° 0° 30° 85° 11-12 21-22 15°15°

Type code **Ex 335 4VSR 1Ö/1S-3D**

- Equipment Categ. 3D, dust Ex zone 22
- 1 NC/1 NO contact (2Ö, UE)
- 4VSR Belt-alignment lever
- Series
- Ex certified component

Ex belt-alignment switches
// Series Ex 355 4VSR

Features/Options
- Ex zone 1 and 21
- Metal enclosure
- 2 contacts
- Mounting details to DIN EN 50 041
- Wiring compartment
- Adjustable-length rod lever with nylon roller
- For light- and medium-strength applications
- Special version only for dust Ex zone 22 available

// EX 355 4VSR

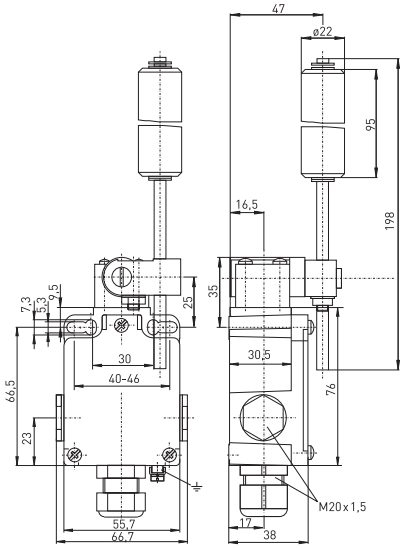

Technical data

Standards	EN 60947-5-1; EN 1088; EN 60079-0, EN 60079-1, EN 60079-7, EN 60079-31; EN ISO 13849-1
Enclosure	zinc die casting, enamelled
Switch insert	Ex 95
Degree of protection	IP 67 according to EN 60529
Contact material	silver
Switching system	slow action, positive break NC contact ⊖
Switching elements	change-over contact with double break Zb or 2 NC contacts, galvanically separated contact bridges
Connection	M3 screw clamps
Cable section	max. 1.5 mm² (incl. conductor ferrules)
B_{10d} (10 % load)	2 million
T_M	max. 20 years
U_{imp}	4 kV
U_i	250 V
I_{the}	6 A
I_e/U_e	6 A/250 VAC; 0.25 A/230 VDC
Utilisation category	AC-15, DC-13
Max. fuse rating	6 A gL/gG D-fuse
Ambient temperat. Ta	–20 °C ... +60 °C
Mechanical life	> 1 million operations
Switching frequency	1800/h
Repeat accuracy	± 0.1 mm
Contact gap	max. 2 x 3.5 mm
Ex marking	Ⓔx II 2G Ex de IIC T6/T5 Gb, II 2D Ex tb IIIC T80°C/T95°C Db IECEx Ex de IIC T6/T5 Gb, Ex tb IIIC T80°C/T95°C Db
Approvals	BVS 04 ATEX E 126, IECEx BVS 07.0013

Contact variants: switch travel/contacts

	Slow action
1 NC/1 NO contact	**Ex 355 4VSR 1Ö/1S** 85° 25°0°25° 85° 23-24 11-12 30°15°15°30°
1 NC/1 NO contact with overlapping	**Ex 355 4VSR UE** 85° 20°0°20° 85° 23-24 15-16 40°25°25°40°
2 NC contacts	**Ex 355 4VSR 2Ö** 85° 30° 0° 30° 85° 11-12 21-22 15°15°

Type code Ex 355 4VSR 1Ö/1S-G-3D

- Equipment Categ. 3D, dust Ex zone 22
- Indicator lamp for 3D, see accessories
- 1 NC/1 NO contact (2Ö, UE)
- 4VSR Belt-alignment lever
- Series
- Ex certified component

Ex belt-alignment switches
// Series Ex ZS 73 SR

Features/Options
- Ex zone 1 and 21
- Metal enclosure
- 2 contacts
- Cable
- Release by push button or key possible
- Belt-alignment roller made of stainless steel 1.4104
- Special version only for dust Ex zone 22

// EX ZS 73 SR

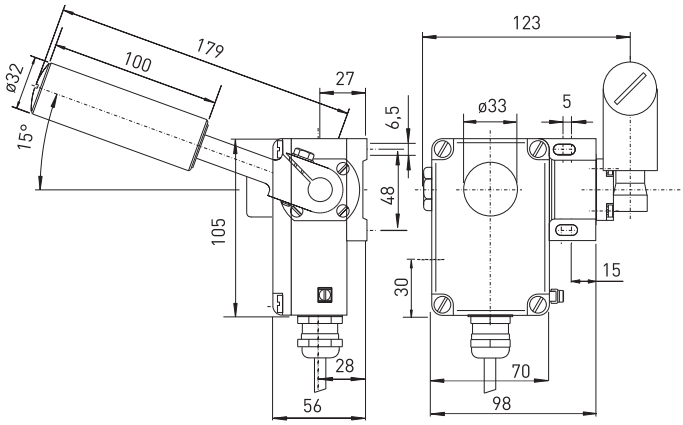

Technical data

Standards	EN 60947-5-1, -5; EN 60079-0, EN 60079-1, EN 60079-31; EN ISO 13849-1
Enclosure	aluminium die casting, enamel finish; ZS 73 NIRO: aluminium die casting, hard-coated and enamelled
Cover	glass-fibre reinforced, shock-proof thermoplastic, ultramid
Switch insert	Ex 14
Degree of protection	Ex ZS 73 SR VD: IP 65; Ex ZS 73 SR VS: IP 54 to EN 60529
Contact material	silver
Switching system	slow action, positive break NC contacts ⊖
Switching elements	change-over contact with double break or 2 NC contacts
Connection	cable H05VV-F
Cable section	4 x 0.75mm² (incl. conductor ferrules)
Cable length	3 m
B_{10d} (10 % load)	Ex ZS 73 SR: 2 million Ex ZS 73 SR VD/VS: 200 000
T_M	max. 20 years
U_{imp}	4 kV
U_i	250 V
I_{the}	T6: 6 A; T5: 3 A
Utilisation category	AC-15, DC-13
I_e/U_e	6 A/250 VAC, 0.25 A/230 VDC
Max. fuse rating	6 A gL/gG D-fuse
Ambient temperat. Ta	T6: –20 °C ... +65 °C; T5: –20 °C ... +95 °C
Mechanical life	Ex ZS 73 SR: > 1 million operations; Ex ZS 73 SR VD/VS: > 100 000 operations;
Ex marking	Ⓔx II 2G Ex d IIC T6/T5 Gb, II 2D Ex tb IIIC T80°C/T95°C Db IECEx Ex d IIC T6/T5 Gb, Ex tb IIIC T80°C/T95°C Db
Approvals	PTB 06 ATEX 1066 X, IECEx PTB 07.0034 X

Contact variants: switch travel/contacts

	Slow action
1 NC/1 NO contact	Ex ZS 73 SR 1Ö/1S 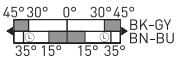
2 NC contacts	Ex ZS 73 SR 2Ö 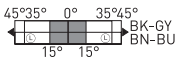

Type code

Ex ZS 73 SR 1Ö/1S VD-G-3D

- Equipment Categ. 3D, Ex Zone 22
- Indicator lamp for 3D, see accessories
- VD Push button release (VS key release, blank without mechanical latching)
- 1 NC/1 NO contact (2Ö)
- SR Belt-alignment lever
- Series
- Ex certified component

Features/Options
- Indicator lamps for zone 22 for 24VDC
  are indicated at the end of this chapter
- Indicator lamp position on the left side, other positions
  possible on request
- Version for equipment category 3D, dust Ex zone 22
  is equipped with a wiring compartment

// Key release VS

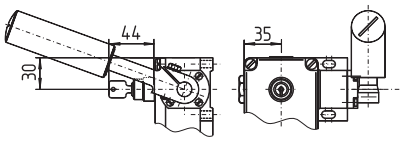

Ex belt-alignment switches
// Series Ex ZS 75 SR

Features/Options
- Ex zone 1 and 21
- Metal enclosure
- 2 or 4 contacts
- Cable
- Release by push button or key possible
- Belt-alignment roller made of stainless steel 1.4104
- Special version only for Ex zone 22

// EX ZS 75 SR

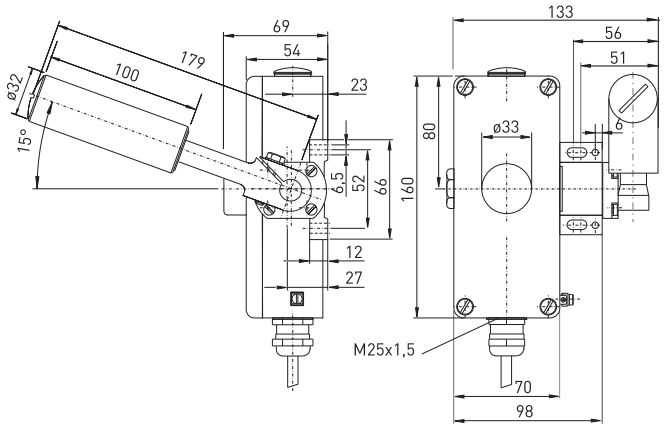

Technical data

Standards	EN 60947-5-1, -5; EN 60079-0, EN 60079-1, EN 60079-31; EN ISO 13849-1
Enclosure	aluminium die casting, enamel finish
Cover	aluminium die casting, enamel finish
Switch insert	Ex 14
Degree of protection	Ex ZS 75 SR VD: IP 65; Ex ZS 75 SR VS: IP 54 to EN 60529
Contact material	silver
Switching system	slow action, positive break NC contacts ⊖
Switching elements	change-over contact with double break or 2 NO/2 NC or 4 NC contacts
Connection	cable H05VV-F
Cable section	4 x 0.75mm² (incl. conductor ferrules) per switch insert
Cable length	3 m
B_{10d} (10 % load)	Ex ZS 75 SR: 2 million Ex ZS 75 SR VD/VS: 200 000
T_M	max. 20 years
U_{imp}	4 kV
U_i	250 V
I_{the}	T6: 6 A; T5: 3 A
Utilisation category	AC-15, DC-13
I_e/U_e	6 A/250 VAC, 0.25 A/230 VDC
Max. fuse rating	6 A gL/gG D-fuse
Ambient temperat. Ta	T6: –20 °C ... +65 °C; T5: –20 °C ... +95 °C
Mechanical life	Ex ZS 75 SR: > 1 million operations; Ex ZS 75 SR VD/VS: > 100 000 operations;
Ex marking	Ⓔx II 2G Ex d IIC T6/T5 Gb, II 2D Ex tb IIIC T80°C/T95°C Db IECEx Ex d IIC T6/T5 Gb, Ex tb IIIC T80°C/T95°C Db
Approvals	PTB 06 ATEX 1067 X, IECEx PTB 07.0034 X

Contact variants: switch travel/contacts

	Slow action
1 NC/1 NO contact	Ex ZS 75 SR 1Ö/1S
2 NC/2 NO contact	Ex ZS 75 SR 2Ö/2S
4 NC contacts	Ex ZS 75 SR 4Ö

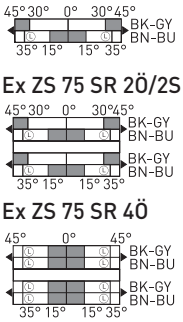

Type code Ex ZS 75 SR 2Ö/2S VD-G-3D

- Equipment Categ. 3D, Ex Zone 22
- Indicator lamp for 3D, see accessories
- VD Push button release (VS key release, blank without mechanical latching)
- 2 NC/2 NO contact (1Ö/1S, 4Ö)
- SR Belt-alignment lever
- Series
- Ex certified component

Features/Options
- Indicator lamps for zone 22 for 24VDC
  are indicated at the end of this chapter
- Indicator lamp position on the left side, other positions
  possible on request
- Version for equipment category 3D, dust Ex zone 22
  is equipped with a wiring compartment

// Key release VS

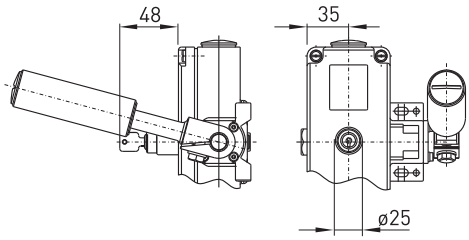

Belt-alignment switches
// Series Ex ZS 90 SR

Features/Options
- Ex zone 1 and 21
- Thermoplastic enclosure
- 2 NC and 2 NO contacts
- With contact staggering:
  1 NC and 1 NO contact switching at 15°,
  1 NC and 1 NO contact switching at 25°
- Release by lever possible
- Belt-alignment lever continuously adjustable

// EX ZS 90 SR

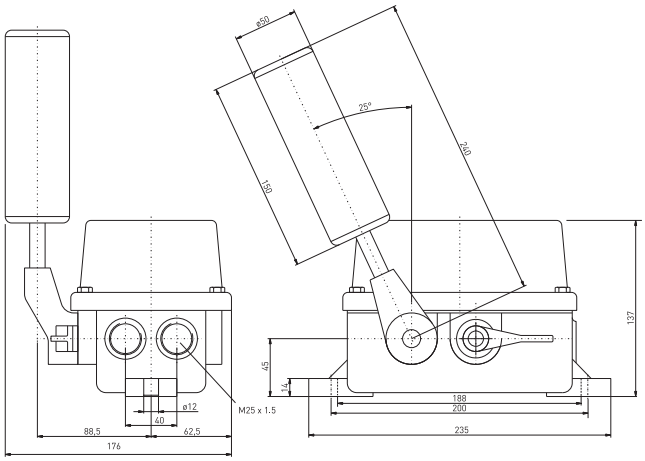

Technical data

Standards	EN 60947-5-1; EN 1088; EN 60079-0, EN 60079-1, EN 60079-31; EN ISO 13849-1
Enclosure	Duroplast
Cover	Duroplast
Switch insert	Ex 14
Degree of protection	IP 65 to EN 60529
Contact material	silver
Switching elements	1 NO/1 NC or 2 NO/2 NC contacts with double break
Switching system	slow action, positive break NC contacts ⊖
Connection	cable H05VV-F, length 3 m
Cable entry	2 x M25 x 1.5
B_{10d} (10 % load)	Ex ZS 90 SR VD: 200 000, Ex ZS 90 SR: 2 million
T_M	max. 20 years
U_{imp}	4 kV
U_i	250 V
I_{the}	T6: 6 A; T5: 3 A
Gebrauchskategorie	AC-15; DC 13
I_e/U_e	6 A/250 VAC; 0,25 A/230 VAC
Max. fuse rating	6 A gG D fuse
Ambient temperat. Ta	T6: –20 °C ... +65 °C; T5: –20 °C ... +95 °C
Mech. life	Ex ZS 90 SR VD: > 100 000 operations, Ex ZS 90 SR: > 1 million operations
Ex marking	Ⓔx II 2G Ex d IIC T6/T5 Gb, II 2D Ex tb IIIC T80°C/T95°C Db; IECEx Ex d IIC T6/T5 Gb, Ex tb IIIC T80°C/T95°C Db
Approvals	PTB 03 ATEX 1070 X*, IECEx PTB 06.0098 X

* referring to the switch insert

Contact variants: switch travel/contacts

	Slow action
2 NC/2 NO contacts	Ex ZS 90 SR 1ÖS/1ÖS 3 4 / 1 2 3 4 / 1 2

Type code

Ex ZS 90 SR 1ÖS/1ÖS VD

- VD lever release (blank without manual latching)
- 2 NC/2 NO contacts
- SR belt-alignment lever
- Series
- Belt-alignment switch
- Ex certified component

ASSEMBLY OF PULL-WIRE SWITCH


steute

Ex pull-wire switches

Ex 61 WZ

Ex pull-wire switches

Range of application

Ex pull-wire switches are suitable as transducers for starting machines or to open and close electrically-powered doors, gates and barriers.

Design and operating principle

Ex pull-wire switches are actuated manually by pulling. The pull-wire switches generate a switching impulse on actuation.

In the appendix the mounting accessories for pull-wire switches can be selected.

All Ex pull-wire switches presented in this chapter bear the CE mark according to the Low Voltage Directive 06/95/EC and to ATEX 94/9/EC. The Ex pull-wire switches per equipment category 3D bear the CE mark without the number of the notified body and have received a CE declaration of manufacturer conformity.

Application

Wall mounting as door opener

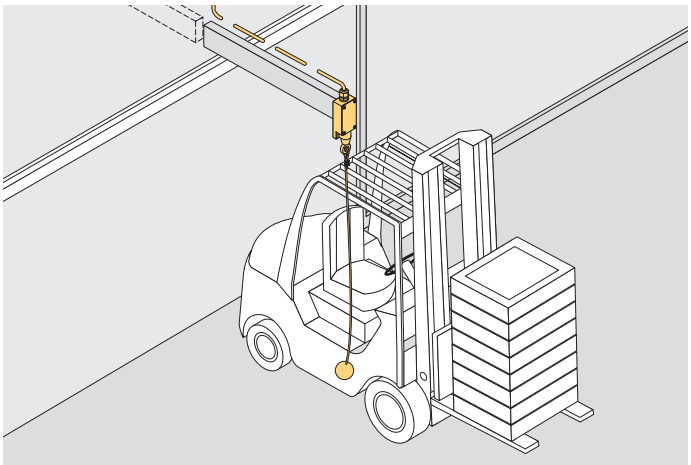

Ceiling mounting

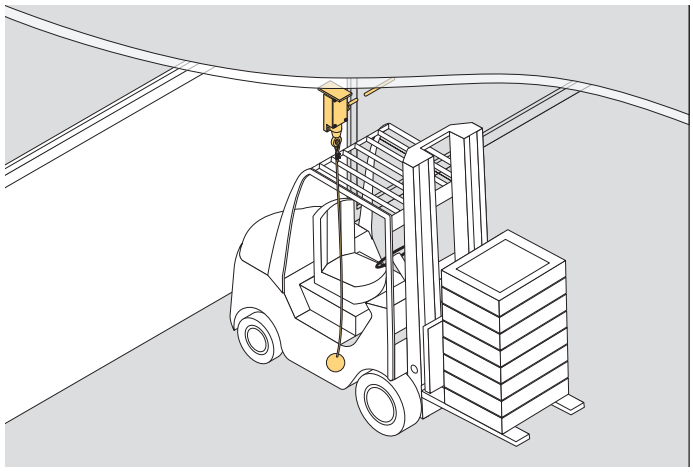

MOUNTING THE PULL-WIRE UNIT ON A PULL-WIRE SWITCH

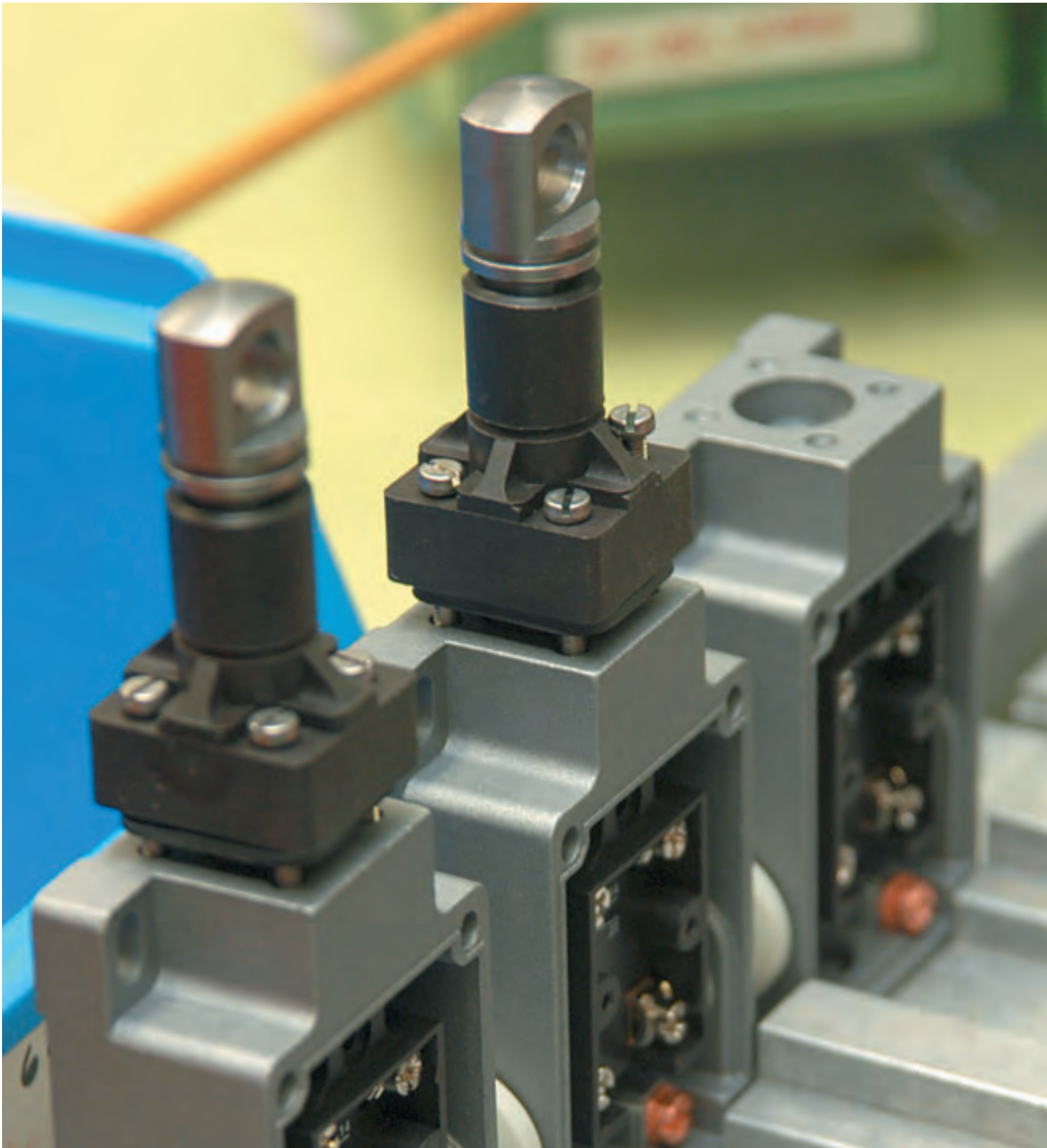

Ex pull-wire switches
// Series Ex 95 WH/90°

Features/Options
- Ex zone 1 and 21
- Thermoplastic enclosure
- Wall or ceiling mounting
- Slow action: 2 contacts
- With gold-plated contacts available on request
- Mounting details to EN 50 047
- Horizontal mounting slots
- Double insulated ⧈
- Special version only for dust Ex zone 22 available

// EX 95 WH/90°

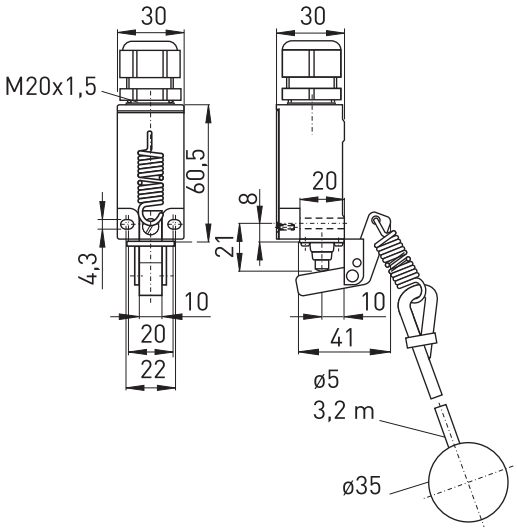

Technical data

Standards	EN 60947-5-1; EN 1088; EN 60079-0, EN 60079-1, EN 60079-7; EN 61241-0, EN 61241-1; EN ISO 13849-1
Design	DIN EN 50 047
Enclosure	glass-fibre reinforced, shock-proof thermoplastic, self-extinguishing UL 94-V0
Switch insert	Ex 95
Degree of protection	IP 67
Contact material	silver
Switching system	slow action, positive break NC contact ⊖
Switching elements	change-over contact with double break Zb, galvanically separated contact bridges
Connection	M3 screw clamps
Cable section	max. 1.5 mm² (incl. conductor ferrules)
Cable entry	M 20 x 1.5
B_{10d} (10 % load)	2 million
T_M	max. 20 years
U_{imp}	4 kV
U_i	250 V
I_{the}	6 A
Utilisation category	AC-15; DC-13
Ie/Ue	6 A/250 VAC; 0.25 A/230 VDC
Max. fuse rating	6 A gL/gG D-fuse
Mechanical life	> 1 million operations
Switching frequency	1800/h
Ambient temperat. Ta	– 20 °C ... + 60 °C
Actuating force	20 N
Features	pull-wire function
Ex marking	Ⓔx II 2G Ex de IIC T6, II 2D Ex td A21 IP67 T80°C
Approvals	DMT 01 ATEX E 118; IECEx in 2011

Contact variants: switch travel/contacts

	Slow action
1 NC/1 NO contact	Ex 95 WH/90° 1Ö/1S 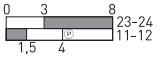

Type code Ex 95 WH/90° 1Ö/1S

- 1 NC/1 NO contact
- WH/90° Actuator with pull-wire
- Series
- Ex certified component

Features/Options
- Ex zone 1 and 21
- Metal enclosure
- Wall mounting
- Slow or snap action: 2 contacts
- Various spring force variants (actuating forces)
- Pull-wire function
- Special version only for dust Ex zone 22 available

// EX/EXM 61 Z

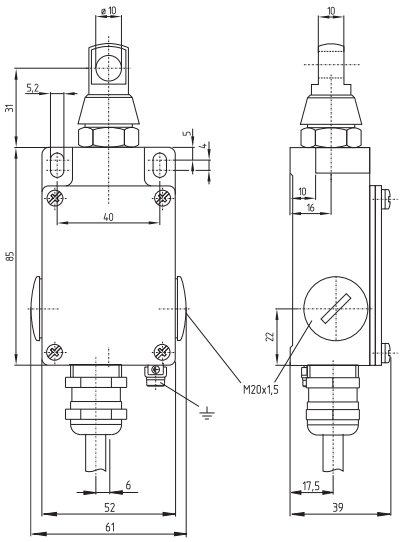

Technical data

Standards	EN 60947-5-1; EN 1088; EN 60079-0, EN 60079-1, EN 60079-31; EN ISO 13849-1
Enclosure	aluminium die casting, enamel finish
Cover	steel, enamel finish
Switch insert	Ex 14, ExM 14
Degree of protection	IP 65 according to EN 60529
Contact material	silver
Switching system	slow or snap action, positive break NC contact ⊖
Switching elements	ExM 61: change-over contact Form C, Ex 61: change-over with double break Zb, galvanically separated contact bridges
Connection	cable H05VV-F, 4 x 0.75 mm²
Cable length	3 m
B_{10d} (10 % load)	Ex 61 Z: 2 million
T_M	max. 20 years
U_{imp}	4 kV
U_i	250 V
I_{the}	T6: 6 A; T5: 3 A
I_e/U_e	6 A/250 VAC; 0.25 A/230 VDC
Utilisation category	AC-15, DC-13
Max. fuse rating	6 A gL/gG D-fuse
Ambient temperat. Ta	T6: –20 °C ... +65 °C; T5: –20 °C ... +95 °C
Mechanical life	> 1 million operations
Switching frequency	1800/h
Repeat accuracy	± 0.1 mm
Contact gap	max. 2 x 4.5 mm
Ex marking	Ⓔx II 2G Ex d IIC T6/T5 Gb, II 2D Ex tb IIIC T80°C/T95°C Db IECEx Ex d IIC T6/T5 Gb, Ex tb IIIC T80°C/T95°C Db
Approvals	Ex 61: PTB 03 ATEX 1070 X*; IECEx PTB 06.0098X ExM 61: PTB 03 ATEX 1069 X* *referring to the switch insert

Contact variants: switch travel/contacts

	Snap action	Slow action
1 NC/1 NO contact	ExM 61 Z 1Ö/1S 0 4 7 GY-BK GY-BN	Ex 61 Z 1Ö/1S 0 4 7 BK-GY BN-BU 2,5

Type code

Ex M 61 WZ 1Ö/1S

- 1 NC/1 NO contact
- Z Actuator towing eye
- W Watertight collar
- Snap action
- Series

Ex certified component: Ex Slow action (ExM Snap action)

Features/Options
- Watertight collar W to protect against the entry of foreign bodies

// Watertight collar W

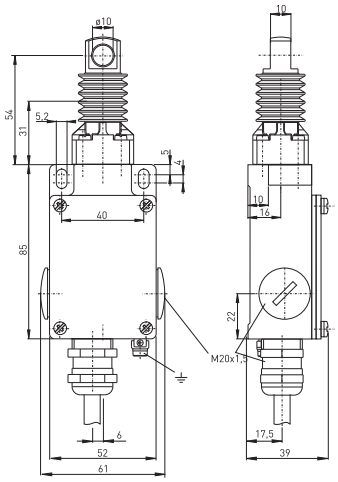

Ex pull-wire switches
// Series Ex ZS 71 Z

Features/Options
- Ex zone 1 and 21
- Metal enclosure
- Wall mounting
- Slow action: 2 contacts
- Pull-wire function
- Ex indicator lamp for zone 22 on page 252
- Special version only for dust Ex zone 22

// EX ZS 71 Z

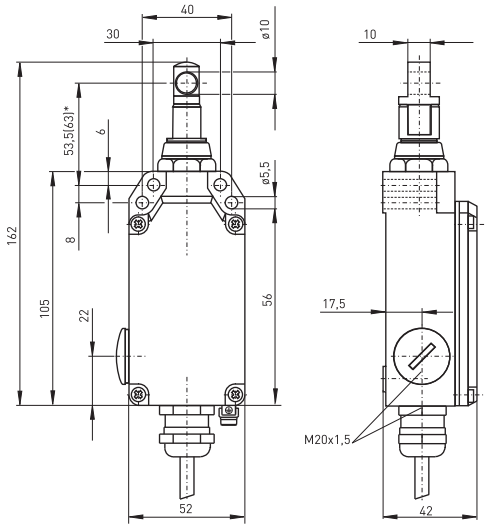

Technical data

Standards	EN 60947-5-1, -5; EN 60079-0, EN 60079-1, EN 60079-31; EN ISO 13849-1
Enclosure	aluminium die casting, enamel finish
Cover	thermoplastic, ultramid
Switch insert	Ex 14
Degree of protection	IP 65 to EN 60529
Contact material	silver
Switching system	slow action, positive break NC contacts ⊖ to EN 60947-5-1
Switching elements	change-over contact with double break, galvanically separated contact bridges
Connection	cable H05VV-F, 4 x 0.75mm² (incl. coductor ferrules)
Cable length	3 m
B_{10d} (10 % load)	2 million
T_M	max. 20 years
U_{imp}	4 kV
U_i	250 V
I_{the}	T6: 6 A; T5: 3 A
Utilisation category	AC-15, DC-13
I_e/U_e	6 A/250 VAC, 0.25 A/230 VDC
Max. fuse rating	6 A gL/gG D-fuse
Ambient temperat. Ta	T6: –20 °C ... +65 °C; T5: –20 °C ... +95 °C
Mechanical life	> 1 million operations
Indicator lamp	as option
Switching frequency	1800/h
Features	pull-wire function
Ex marking	Ⓔx II 2G Ex d IIC T6/T5 Gb, II 2D Ex tb IIIC T80°C/T90°C Db IECEx Ex d IIC T6/T5 Gb, Ex tb IIIC T80°C/T90°C Db
Approvals	PTB 06 ATEX 1065 X, IECEx PTB 07.0034 X

Contact variants: switch travel/contacts

	Slow action
1 NC/1 NO contact	Ex ZS 71 Z 1Ö/1S

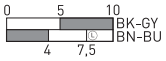

Type code

Ex ZS 71 W Z 1Ö/1S-3D

- Equipment Categ. 3D, dust Ex zone 22
- 1 NC/1 NO contact
- Z Actuator towing eye
- W Watertight collar
- Series
- ZS Pull-wire switch
- Ex certified component

ASSEMBLY OF A PULL-WIRE SWITCH

Features/Options
- Pull-wire yellow (polypropylene)
- With rubber ball and Duplex wire clamp
- 1, 2, 3 or 4 m long
- Ordering unit: 1 piece

// Pull-wire

Order number	
Pull-wire with ball for pull-wire switches 1 m	04.73.7106
Pull-wire with ball for pull-wire switches 2 m	04.73.7107
Pull-wire with ball for pull-wire switches 3 m	04.73.7108
Pull-wire with ball for pull-wire switches 4 m	04.73.7109

Features/Options
- Only suitable for application in zone 2 and 22
- Lamp cap red, green or yellow
- M20 x 1.5
- 24 VDC
- Ordering unit: 1 piece

// Ex indicator Multi-LED coloured

// Ex indicator Multi-LED coloured

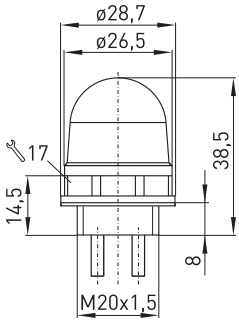

Order number	
Ex indicator lamp Multi-LED RD 24 VDC	04.00.7122
Ex indicator lamp Multi-LED GN 24 VDC	04.00.7123
Ex indicator lamp Multi-LED YE 24 VDC	04.00.7124

Features/Options
- Only suitable for application in zone 2 and 22
- Lamp cap white
- M20 x 1.5
- 24 VDC
- Ordering unit: 1 piece

// Ex indicator Multi-LED white

// Ex indicator Multi-LED white

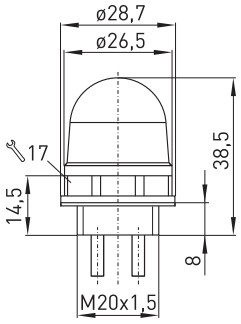

Order number	
Ex indicator lamp Multi-LED WH 24 VDC	04.00.7125


steute

Ex foot switches

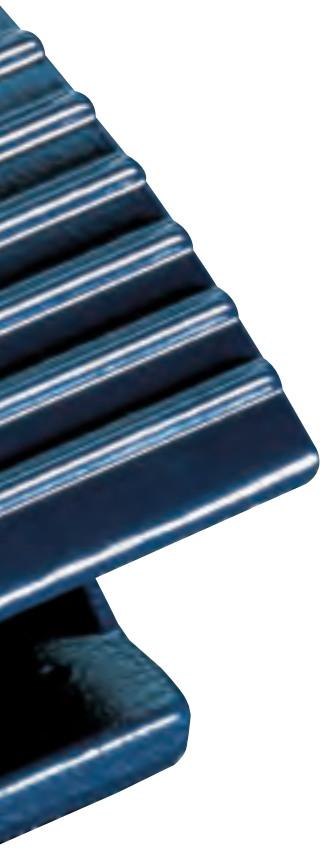

Ex GFI

Ex foot switches

Range of application

Ex foot switches are mounted on machines and plants in cases where operation by hand is not possible. They are used to start and stop operations and production processes. Depending on the environmental conditions and mechanical duty, different versions of foot switches are used.

Design and operating principle

The Ex GFS and Ex GFSI range foot switches are mounted with a shield to protect against unintentional actuation.

All Ex foot switches are equipped with slow or snap action contacts. They have IP 65 degree of protection.

All foot switches series Ex GF, Ex GFS, Ex GFI and Ex GFSI are Ex approved according to ATEX.

The foot switches bear the CE mark according to the Low Voltage Directive 06/95/EC and to ATEX 94/9/EC. The Ex foot switches per equipment category 3D bear the CE mark without the number of the notified body and have received a CE declaration of manufacturer conformity.

Application

Foot switch on a drill machine

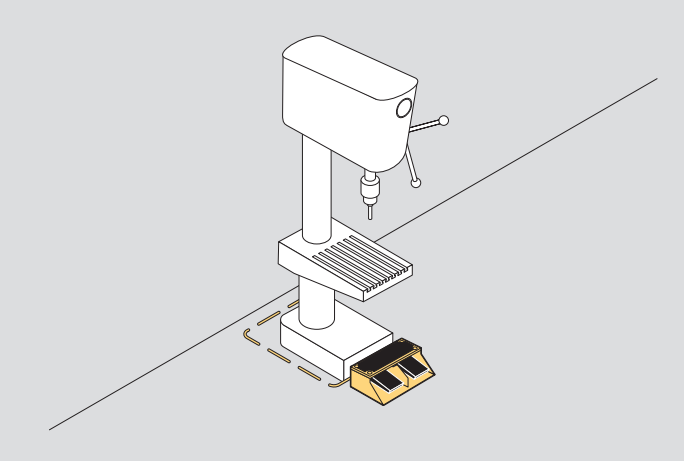

Foot switch on a CNC machining centre

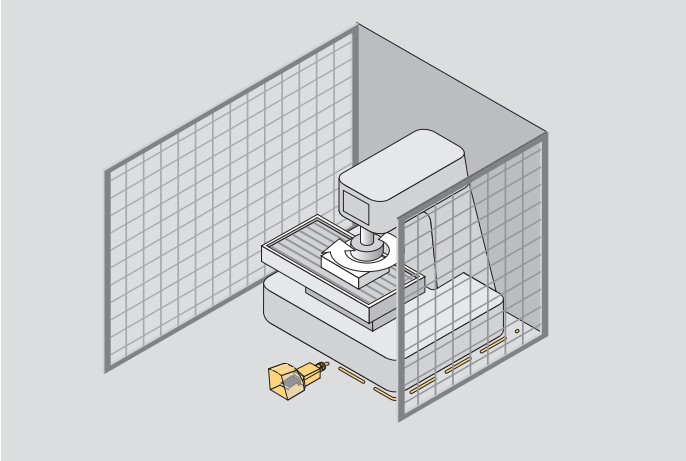

Ex foot switches
// Series Ex GF

Features/Options
- Ex zone 1 and 21
- Metal enclosure
- Without protective shield
- Max. 2 contacts
- Low pedal height
- With pre-wired cable, cable length 3 metres
- Available with special finish in RAL colour tones
- Special version only for dust Ex zone 22 available

// EX GF

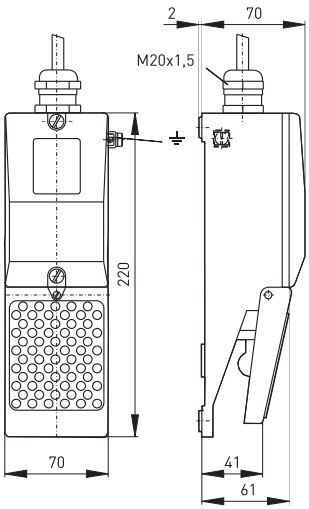

Technical data

Standards	EN 60947-5-1; EN 1088; EN 60079-0, EN 60079-1, EN 60079-31; EN ISO 13849-1
Enclosure	aluminium die casting, enamel finish, RAL 5011
Cover	glass-fibre reinforced thermoplastic
Pedal	glass-fibre reinforced thermoplastic
Connection	cable H05VV-F, 3/4 x 0.75 mm²
Cable length	3 m
Contact material	silver
Degree of protection	IP 65 to EN 60529
Switching system	slow action with double break, positive break NC contact ⊖ or snap action with single break
Switch insert	slow action Ex GF: Ex 14 snap action Ex GFM: ExM 14
B_{10d} (10 % load)	Ex GF: 2 million
T_M	max. 20 years
Utilisation category	AC-15; DC-13
I_e/U_e	Ex GF: 6 A/250 VAC; 0.25 A/230 VDC Ex GFM: 5 A/250 VAC; 0.25 A/230 VDC
Max. fuse rating	Ex GF: 6 A gL/gG D-fuse Ex GFM: 5 A gL/gG D-fuse
Ambient temperat. Ta	T6: –20 °C ... +65 °C; T5: –20 °C ... +95 °C
Mechanical life	> 1 million operations
Ex marking	Ⓔx II 2G Ex d IIC T6/T5 Gb, II 2D Ex tb IIIC T80°C/T95°C Db IECEx Ex d IIC T6/T5 Gb, Ex tb IIIC T80°C/T95°C Db
Approvals	Ex GF: PTB 03 ATEX 1070 X*; IECEx PTB 06.0098 X* Ex GFM: PTB 03 ATEX 1069 X*; IECEx in 2011 *referring to the switch insert Ex GF:

Contact variants: switch travel/contacts

	Snap action	Slow action
1 NC/1 NO contact	Ex GFM BN GY BK	Ex GF 1Ö/1S BN 11 12 BU BK 23 24 GY

Type code

Ex GFM K 1Ö/1S-3D

- 3D: Equipment Categ. 3D, dust Ex zone 22
- 1Ö/1S: 1 NC/1 NO contact
- K: Pedal cover
- M: M Snap action (without M slow action)
- GFM: Series
- Ex: Ex certified component

// Pedal cover K

// Pedal cover K

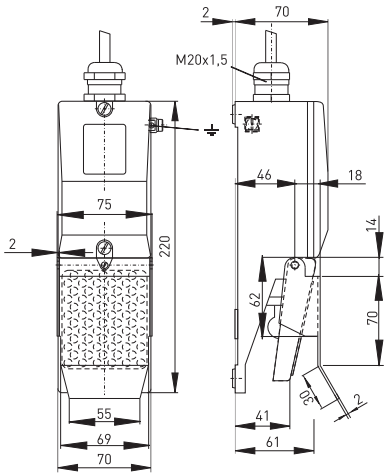

Ex foot switches
// Series Ex GFS

Features/Options
- Ex zone 1 and 21
- Metal enclosure
- With protective shield
- Max. 2 contacts
- Low pedal height
- With pre-wired cable, cable length 3 metres
- Available with special finish in RAL colour tones
- Special version only for dust Ex zone 22 available

// EX GFS

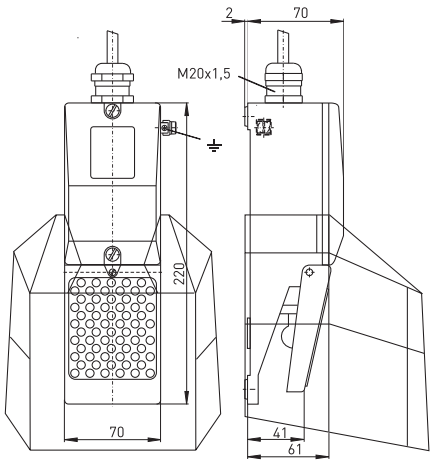

Technical data

Standards	EN 60947-5-1; EN 1088; EN 60079-0, EN 60079-1, EN 60079-31; EN ISO 13849-1
Enclosure	aluminium die casting, enamel finish, RAL 5011
Pedal	glass-fibre reinforced thermoplastic
Protective shield	aluminium die casting, enamel finish, RAL 5011
Connection	cable H05VV-F, 3/4 x 0.75 mm^2
Cable length	3 m
Contact material	silver
Degree of protection	IP 65 to EN 60529
Switching system	slow action with double break, positive break NC contact ⊖ or snap action with single break
Switch insert	slow action Ex GFS: Ex 14 snap action Ex GFSM: ExM 14
B_{10d} (10 % load)	Ex GFS: 2 million
T_M	max. 20 years
Utilisation category	AC-15; DC-13
I_e/U_e	Ex GFS: 6 A/250 VAC; 0.25 A/230 VDC Ex GFSM: 5 A/250 VAC; 0.25 A/230 VDC
Max. fuse rating	Ex GFS: 6 A gL/gG D-fuse Ex GFSM: 5 A gL/gG D-fuse
Ambient temperat. Ta	T6: –20 °C ... +65 °C; T5: –20 °C ... +95 °C
Mechanical life	> 1 million operations
Ex marking	Ⓔx II 2G Ex d IIC T6/T5 Gb, II 2D Ex tb IIIC T80°C/T95°C Db IECEx Ex d IIC T6/T5 Gb, Ex tb IIIC T80°C/T95°C Db
Approvals	Ex GFS: PTB 03 ATEX 1070 X*; IECEx PTB 06.0098 X* Ex GFSM: PTB 03 ATEX 1069 X*; IEC in 2011 *referring to the switch insert Ex GFS:

Contact variants: switch travel/contacts

	Snap action	Slow action
1 NC/1 NO contact	**Ex GFSM** BN GY BK	**Ex GFS 1Ö/1S** BN 11 12 BU BK 23 24 GY

Type code Ex GFSM K 1Ö/1S-3D

- Equipment Categ. 3D, dust Ex zone 22
- 1 NC/1 NO contact
- Pedal cover
- M Snap action (without M slow action)
- S Protective shield
- Series
- Ex certified component

Ex foot switches
// Series Ex GFS, variants

Features/Options
- Carrying handle:
  stainless steel 4104 with thermoplastic grip

// Pedal cover K

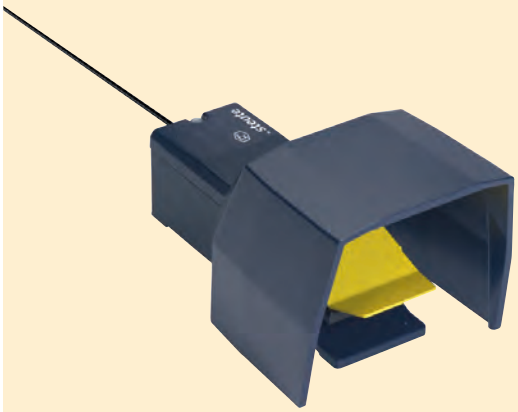

// Pedal cover K

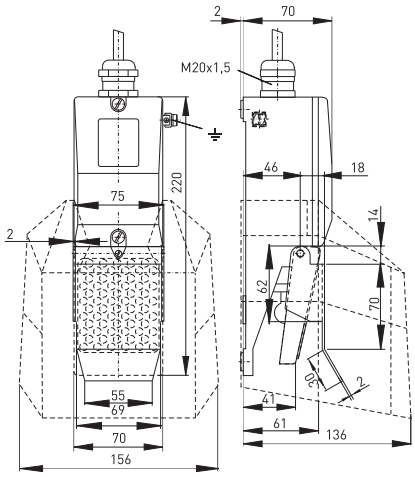

// Foot rest FST

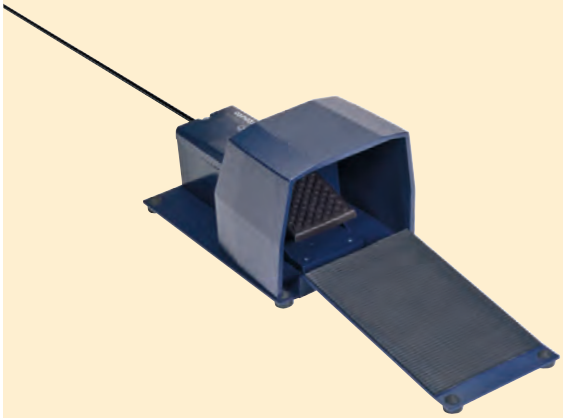

// Foot rest FST

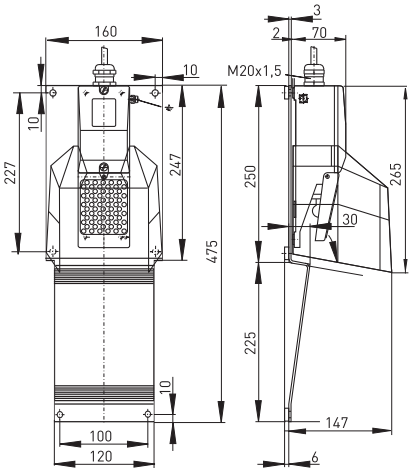

// Carrying handle TST

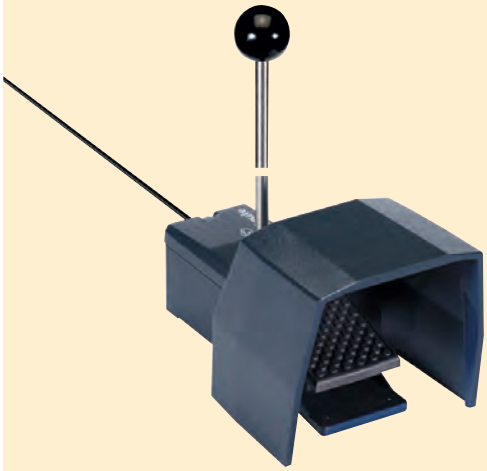

// Carrying handle TST

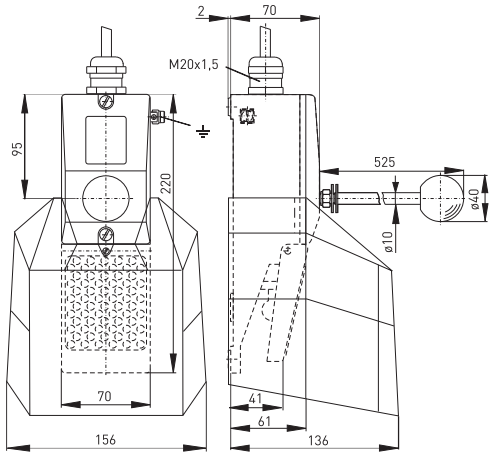

Ex foot switches
// Series Ex GFI

Features/Options
- Ex zone 1 and 21
- Metal enclosure
- Without protective shield
- Max. 2 contacts
- Low pedal height
- With pre-wired cable, cable length 3 metres
- Available with special finish in RAL colour tones
- Special version only for dust Ex zone 22 available

// EX GFI

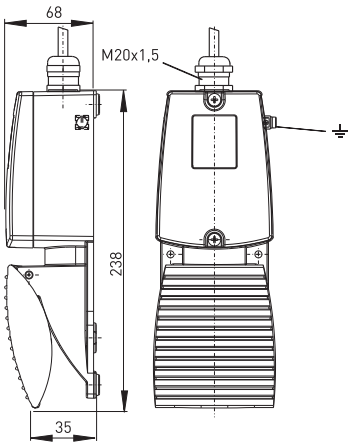

Technical data

Standards	EN 60947-5-1; EN 1088; EN 60079-0, EN 60079-1, EN 60079-31; EN ISO 13849-1
Enclosure	aluminium die casting, enamel finish, RAL 5011
Cover	aluminium die casting, enamel finish, RAL 2004
Pedal	aluminium die casting, enamel finish, RAL 5011
Connection	cable H05VV-F, 3/4 x 0.75 mm^2
Cable length	3 m
Contact material	silver
Degree of protection	IP 65 to EN 60529
Switching system	slow action with double break, positive break NC contact ⊖ or snap action with single break
Switch insert	slow action Ex GFI: Ex 14 snap action Ex GFIM: ExM 14
B_{10d} (10 % load)	Ex GFI: 2 million
T_M	max. 20 years
Utilisation category	AC-15; DC-13
I_e/U_e	Ex GFI: 6 A/250 VAC; 0.25 A/230 VDC Ex GFIM: 5 A/250 VAC; 0.25 A/230 VDC
Max. fuse rating	Ex GFI: 6 A gL/gG D-fuse Ex GFIM: 5 A gL/gG D-fuse
Ambient temperat. Ta	T6: –20 °C ... +65 °C; T5: –20 °C ... +95 °C
Mechanical life	> 1 million operations
Ex marking	Ⓔx II 2G Ex d IIC T6/T5 Gb, II 2D Ex tb IIIC T80°C/T95°C Db IECEx Ex d IIC T6/T5 Gb, Ex tb IIIC T80°C/T95°C Db
Approvals	Ex GFI: PTB 03 ATEX 1070 X*; IECEx PTB 06.0098 X* Ex GFIM: PTB 03 ATEX 1069 X*; IECEx in 2011 *referring to the switch insert Ex GFI:

Contact variants: switch travel/contacts

	Snap action	Slow action
1 NC/1 NO contact	Ex GFIM BN GY BK	Ex GFI 1Ö/1S BN 11 12 BU BK 23 24 GY

Type code	Ex GFIM 1Ö/1S-3D

- Equipment Categ. 3D, dust Ex zone 22
- 1 NC/1 NO contact
- M Snap action (without M slow action)
- Series
- Ex certified component

Features/Options
- Ex zone 1 and 21
- Metal enclosure
- With protective shield
- Max. 2 contacts
- Low pedal height
- With pre-wired cable, cable length 3 metres
- Available with special finish in RAL colour tones
- Special version only for dust Ex zone 22 available

// EX GFSI

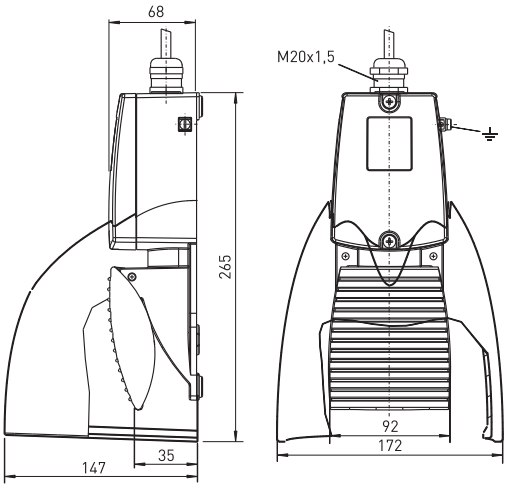

Technical data

Standards	EN 60947-5-1; EN 1088; EN 60079-0, EN 60079-1, EN 60079-31; EN ISO 13849-1
Enclosure	aluminium die casting, enamel finish, RAL 5011
Pedal	aluminium die casting, enamel finish, RAL 5011
Protective shield	aluminium die casting, enamel finish, RAL 2004
Connection	cable H05VV-F, 3/4 x 0.75 mm^2
Cable length	3 m
Contact material	silver
Degree of protection	IP 65 to EN 60529
Switching system	slow action with double break, positive break NC contact ⊖ or snap action with single break
Switch insert	slow action Ex GFSI: Ex 14 snap action Ex GFSIM: ExM 14
B_{10d} (10 % load)	Ex GFSI: 2 million
T_M	max. 20 years
Utilisation category	AC-15; DC-13
I_e/U_e	Ex GFSI: 6 A/250 VAC; 0.25 A/230 VDC Ex GFSIM: 5 A/250 VAC; 0.25 A/230 VDC
Max. fuse rating	Ex GFSI: 6 A gL/gG D-fuse Ex GFSIM: 5 A gL/gG D-fuse
Ambient temperat. Ta	T6: –20 °C ... +65 °C; T5: –20 °C ... +95 °C
Mechanical life	> 1 million operations
Ex marking	Ⓔx II 2G Ex d IIC T6/T5 Gb, II 2D Ex tb IIIC T80°C/T95°C Db IECEx Ex d IIC T6/T5 Gb, Ex tb IIIC T80°C/T95°C Db
Approvals	Ex GFSI: PTB 03 ATEX 1070 X*; IECEx PTB 06.0098 X* Ex GFSIM: PTB 03 ATEX 1069 X*; IECEx in 2011 *referring to the switch insert Ex GFSI:

Contact variants: switch travel/contacts

	Snap action	Slow action
1 NC/1 NO contact	Ex GFSIM BN GY BK	Ex GFSI 1Ö/1S BN 11 12 BU BK 23 24 GY

Type code

Ex GFSIM 1Ö/1S-3D

- Equipment Categ. 3D, dust Ex zone 22
- 1 NC/1 NO contact
- M Snap action (ohne M Slow action)
- Series, S Protective shield
- Ex certified component

Ex foot switches
// Series Ex GF 2

Features/Options
- Ex zone 1 and 21
- Metal enclosure
- Without protective shield
- Max. 2 contacts per pedal
- Low pedal height
- With pre-wired cable, cable length 3 metres
- Available with special finish in RAL colour tones
- Special version only for dust Ex zone 22 available

// EX GF 2

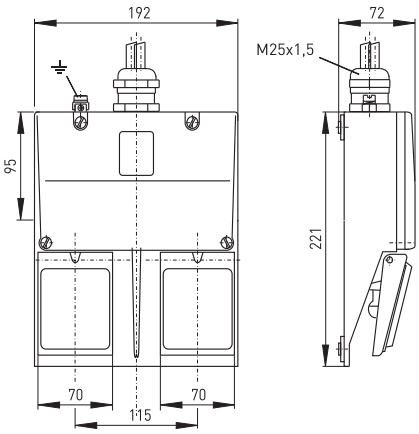

Technical data

Standards	EN 60947-5-1; EN 1088; EN 60079-0, EN 60079-1, EN 60079-31; EN ISO 13849-1
Enclosure	aluminium die casting, enamel finish, RAL 5011
Cover	aluminium die casting, enamel finish, RAL 5011
Pedal	glass-fibre reinforced thermoplastic
Connection	cable H05VV-F, 3/4 x 0.75 mm²
Cable length	3 m
Contact material	silver
Degree of protection	IP 65 to EN 60529
Switching system	slow action with double break, positive break NC contact ⊖ or snap action with single break
Switch insert	slow action Ex GF 2: Ex 14 snap action Ex GFM 2: ExM 14
B_{10d} (10 % load)	Ex GF 2: 2 million
T_M	max. 20 years
Utilisation category	AC-15; DC-13
I_e/U_e	Ex GF 2: 6 A/250 VAC; 0.25 A/230 VDC Ex GFM 2: 5 A/250 VAC; 0.25 A/230 VDC
Max. fuse rating	Ex GF 2: 6 A gL/gG D-fuse Ex GFM 2: 5 A gL/gG D-fuse
Ambient temperat. Ta	T6: –20 °C ... +65 °C; T5: –20 °C ... +95 °C
Mechanical life	> 1 million operations
Ex marking	Ⓔx II 2G Ex d IIC T6/T5 Gb II 2 D Ex tb IIIC T80°C/T95°C Db IECEx Ex d IIC T5/T6 Gb Ex tb IIIC T80°C/T95°C Db
Approvals	Ex GF 2: PTB 03 ATEX 1070 X*; IECEx PTB 06.0098 X* Ex GFM 2: PTB 03 ATEX 1069 X*, IECEx in 2011 *referring to the switch insert Ex GF 2:

Contact variants: switch travel/contacts

	Snap action	Slow action
1 NC/1 NO contact per pedal	**Ex GFM 2** BN GY BK	**Ex GF 2 1ÖS/1ÖS** BN 11 12 BU BK 23 24 GY

Type code Ex GFM 2 1ÖS/1ÖS-3D

- Equipment Categ. 3D, dust Ex zone 22
- 1 NC/1 NO contact per pedal
- 2 pedals
- M Snap action (without M slow action)
- Series
- Ex certified component

// Pedal cover K

// Pedal cover K

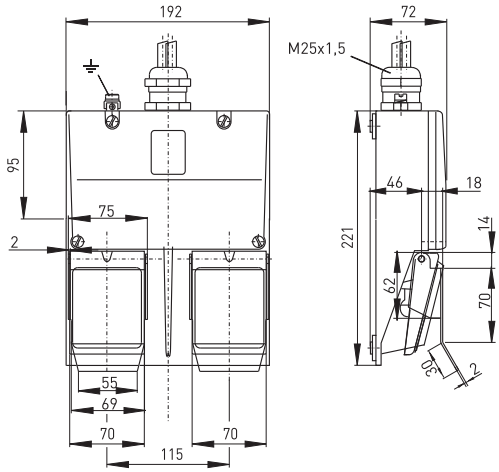

Ex foot switches
// Series Ex GFS 2

Features/Options
- Ex zone 1 and 21
- Metal enclosure
- With protective shield
- Max. 2 contacts per pedal
- Low pedal height
- With pre-wired cable, cable length 3 metres
- Available with special finish in RAL colour tones
- Special version only for dust Ex zone 22 available

// EX GFS 2

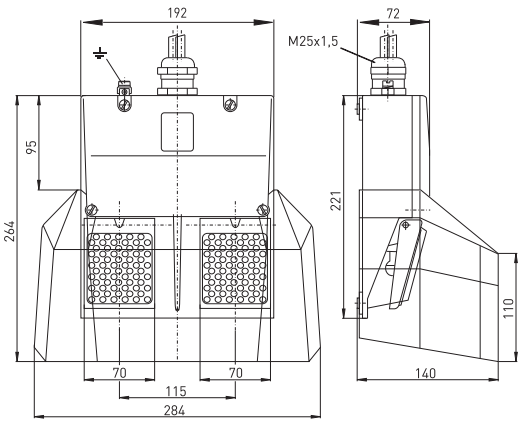

Technical data

Standards	EN 60947-5-1; EN 1088; EN 60079-0, EN 60079-1, EN 60079-31; EN ISO 13849-1
Enclosure	aluminium die casting, enamel finish, RAL 5011
Pedal	glass-fibre reinforced thermoplastic
Protective shield	aluminium die casting, enamel finish, RAL 5011
Connection	cable H05VV-F, 3/4 x 0.75 mm^2
Cable length	3 m
Contact material	silver
Degree of protection	IP 65 to EN 60529
Switching system	slow action with double break, positive break NC contact ⊖ or snap action with single break
Switch insert	slow action Ex GFS 2: Ex 14 snap action Ex GFSM 2: ExM 14
B_{10d} (10 % load)	Ex GFS 2: 2 million
T_M	max. 20 years
Utilisation category	AC-15; DC-13
I_e/U_e	Ex GFS 2: 6 A/250 VAC; 0.25 A/230 VDC Ex GFSM 2: 5 A/250 VAC; 0.25 A/230 VDC
Max. fuse rating	Ex GFS 2: 6 A gL/gG D-fuse Ex GFSM 2: 5 A gL/gG D-fuse
Ambient temperat. Ta	T6: –20 °C ... +65 °C; T5: –20 °C ... +95 °C
Mechanical life	> 1 million operations
Ex marking	Ⓔx II 2G Ex d IIC T6/T5 Gb II 2 D Ex tb IIIC T80°C/T95°C Db IECEx Ex d IIC T5/T6 Gb Ex tb IIIC T80°C/T95°C Db
Approvals	Ex GFS 2: PTB 03 ATEX 1070 X*; IECEx PTB 06.0098 X* Ex GFSM 2: PTB 03 ATEX 1069 X*, IECEx in 2011 *referring to the switch insert Ex GFS 2:

Contact variants: switch travel/contacts

	Snap action	Slow action
1 NC/1 NO contact per pedal	**Ex GFSM 2** BN GY BK	**Ex GFS 2 1ÖS/1ÖS** BN 11 12 BU BK 23 24 GY

Type code Ex GFSM 2 K 1ÖS/1ÖS-3D

- Equipment Categ. 3D, dust Ex zone 22
- 1 NC/1 NO contact per pedal
- Pedal cover
- 2 pedals
- M Snap action (without M slow action)
- S Protective shield
- Series
- Ex certified component

Ex foot switches
// Series Ex GFS 2, variants

Features/Options
- Carrying handle:
  stainless steel 4104 with thermoplastic grip

// Pedal cover K

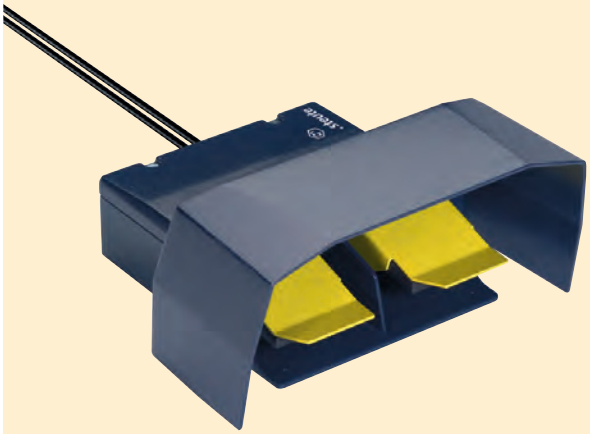

// Pedal cover K

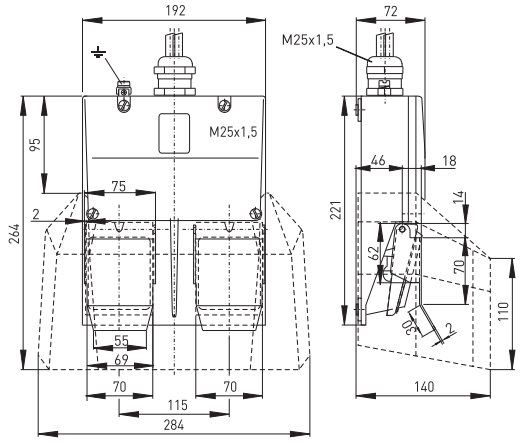

// Carrying handle TST

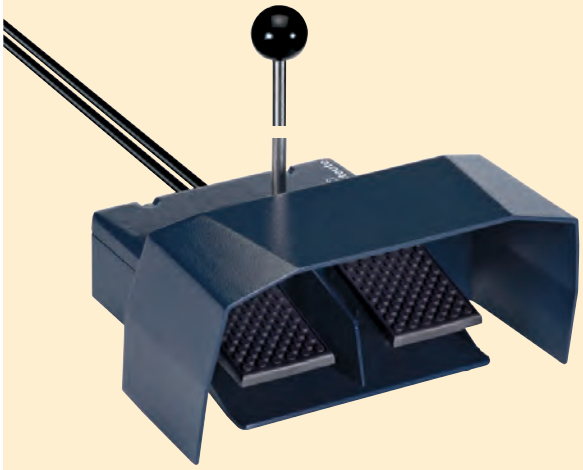

// Carrying handle TST

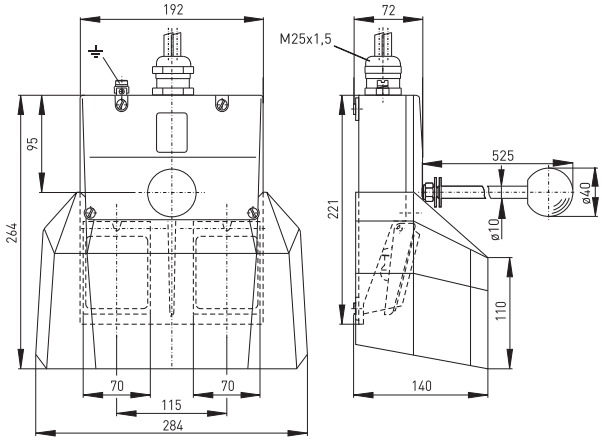

Ex foot switches
// Series Ex GF 3

Features/Options
- Ex zone 1 and 21
- Metal enclosure
- Without protective shield
- Max. 2 contacts per pedal
- Low pedal height
- With pre-wired cable, cable length 3 metres
- Available with special finish in RAL colour tones
- Special version only for dust Ex zone 22 available

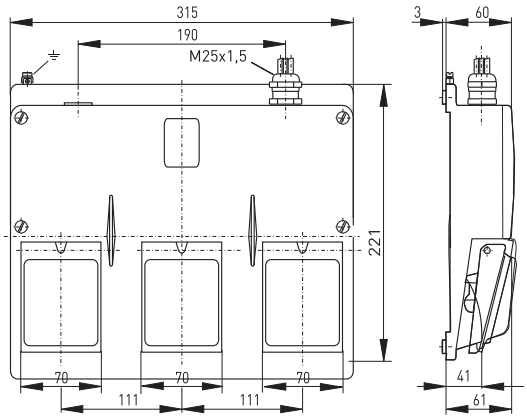

Technical data

Standards	EN 60947-5-1; EN 1088; EN 60079-0, EN 60079-1, EN 60079-31; EN ISO 13849-1
Enclosure	aluminium die casting, enamel finish, RAL 5011
Cover	aluminium die casting, enamel finish, RAL 5011
Pedal	glass-fibre reinforced thermoplastic
Connection	cable H05VV-F, 3/4 x 0.75 mm²
Cable length	3 m
Contact material	silver
Degree of protection	IP 65 to EN 60529
Switching system	slow action with double break, positive break NC contact ⊖ or snap action with single break
Switch insert	slow action Ex GF 3: Ex 14 snap action Ex GFM 3: ExM 14
B_{10d} (10 % load)	Ex GF 3: 2 million
T_M	max. 20 years
Utilisation category	AC-15; DC-13
I_e/U_e	Ex GF 3: 6 A/250 VAC; 0.25 A/230 VDC Ex GFM 3: 5 A/250 VAC; 0.25 A/230 VDC
Max. fuse rating	Ex GF 3: 6 A gL/gG D-fuse Ex GFM 3: 5 A gL/gG D-fuse
Ambient temperat. Ta	T6: –20 °C ... +65 °C; T5: –20 °C ... +95 °C
Mechanical life	> 1 million operations
Ex marking	Ⓔx II 2G Ex d IIC T6/T5 Gb II 2 D Ex tb IIIC T80°C/T95°C Db IECEx Ex d IIC T5/T6 Gb Ex tb IIIC T80°C/T95°C Db
Approvals	Ex GF 3: PTB 03 ATEX 1070 X*; IECEx PTB 06.0098 X* Ex GFM 3: PTB 03 ATEX 1069 X*, IECEx in 2011 *referring to the switch insert Ex GF 3:

Contact variants: switch travel/contacts

	Snap action	Slow action
1 NC/1 NO contact per pedal	**Ex GFM 3** BN GY BK	**Ex GF 3 1ÖS/1ÖS/1ÖS** BN 11 12 BU BK 23 24 GY

Type code Ex GFM 3 K 1ÖS/1ÖS/1ÖS-3D

- Equipment Category 3D, dust Ex zone 22
- 1 NC/1 NO contact per pedal
- Pedal cover
- 3 pedals
- M Snap action (without M slow action)
- Series
- Ex certified component

Features/Options
- Ex zone 1 and 21
- Metal enclosure
- With protective shield
- Max. 2 contacts per pedal
- Low pedal height
- With pre-wired cable, cable length 3 metres
- Available with special finish in RAL colour tones
- Special version only for dust Ex zone 22 available

// EX GFS 3

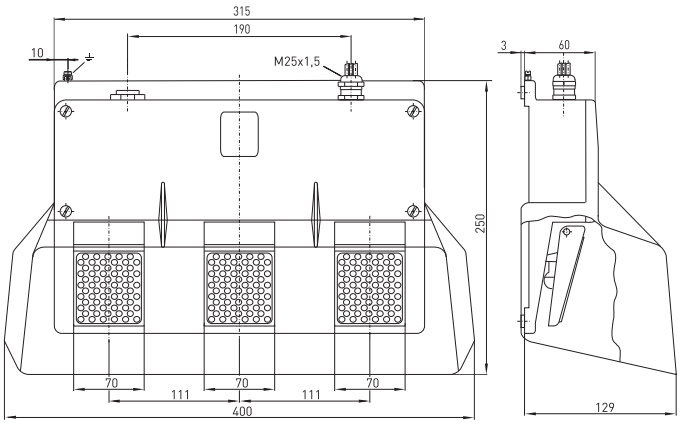

Technical data

Standards	EN 60947-5-1; EN 1088; EN 60079-0, EN 60079-1, EN 60079-31; EN ISO 13849-1
Enclosure	aluminium die casting, enamel finish, RAL 5011
Pedal	glass-fibre reinforced thermoplastic
Protective shield	aluminium die casting, enamel finish, RAL 5011
Connection	cable H05VV-F, 3/4 x 0.75 mm²
Cable length	3 m
Contact material	silver
Degree of protection	IP 65 to EN 60529
Switching system	slow action with double break, positive break NC contact ⊖ or snap action with single break
Switch insert	slow action Ex GFS 3: Ex 14 snap action Ex GFSM 3: ExM 14
B_{10d} (10 % load)	Ex GFS 3: 2 million
T_M	max. 20 years
Utilisation category	AC-15; DC-13
I_e/U_e	Ex GFS 3: 6 A/250 VAC; 0.25 A/230 VDC Ex GFSM 3: 5 A/250 VAC; 0.25 A/230 VDC
Max. fuse rating	Ex GFS 3: 6 A gL/gG D-fuse Ex GFSM 3: 5 A gL/gG D-fuse
Ambient temperat. Ta	T6: –20 °C ... +65 °C; T5: –20 °C ... +95 °C
Mechanical life	> 1 million operations
Ex marking	Ⓔx II 2G Ex d IIC T6/T5 Gb II 2 D Ex tb IIIC T80°C/T95°C Db IECEx Ex d IIC T5/T6 Gb Ex tb IIIC T80°C/T95°C Db
Approvals	Ex GFS 3: PTB 03 ATEX 1070 X*; IECEx PTB 06.0098 X* Ex GFSM 3: PTB 03 ATEX 1069 X*, IECEx in 2011 *referring to the switch insert Ex GFS 3:

Contact variants: switch travel/contacts

	Snap action	Slow action
1 NC/1 NO contact per pedal	Ex GFSM 3 BN GY BK	Ex GFS 3 1ÖS/1ÖS/1ÖS BN 11 12 BU BK 23 24 GY

Type code

Ex GFSM 3 K 1ÖS/1ÖS/1ÖS-3D

- Equipment Category 3D, dust Ex zone 22
- 1 NC/1 NO contact per pedal
- Pedal cover
- 3 pedals
- M Snap action (without M slow action)
- S Protective shield
- Series
- Ex certified component


steute
M20-1Sr
EEx RC
220 2.3.1.01

Ex magnetic sensors

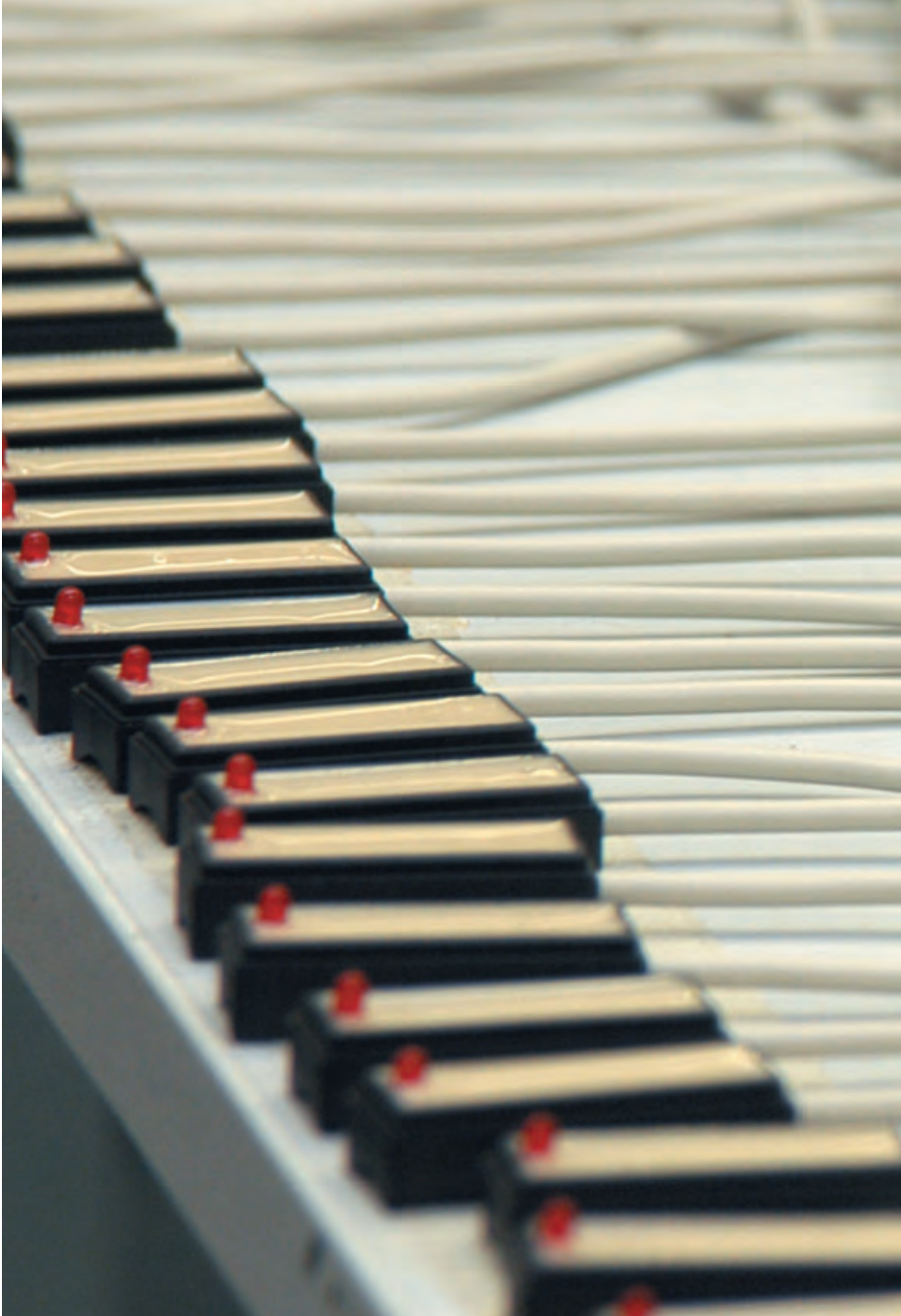

Ex magnetic sensors

Range of application

Ex magnetic sensors are preferable where extreme dirt occurs or strict hygienic requirements must be met. This is because they are easy to clean. The high degree of protection allows for outside applications.

Even in the presence of aggressive materials, e.g. in galvanisation technology, safe switching is ensured through encapsulation of the contacts. A further advantage is the possibility of concealed mounting behind non-magnetic materials. Workplace surfaces can be designed without dirt-catching edges, functional spacings or covers.

For applications where a precise approach of the magnet to the sensor is not possible and highly fluctuating actuating distances occur Ex magnetic sensors are also suitable.

Design and operating principle

The Ex magnetic sensors are actuated by an M series permanent magnet, described at the end of this chapter, without any mechanical contact. The devices can be selected with NO, change-over or bistable contacts. All magnetic sensors described in this chapter are supplied with pre-wired cables.

The mounting site for magnetic sensors must be free of magnetic fields.

The magnetic sensors described in this chapter bear the CE mark according to the Low Voltage Directive 06/95/EC and to ATEX 94/9/EC. The Ex magnetic sensors per equipment category 3G/D bear the CE mark without the number of the notified body and have received a CE declaration of manufacturer conformity.

Operating principle

Magnetic sensors change-over contact, actuation from front

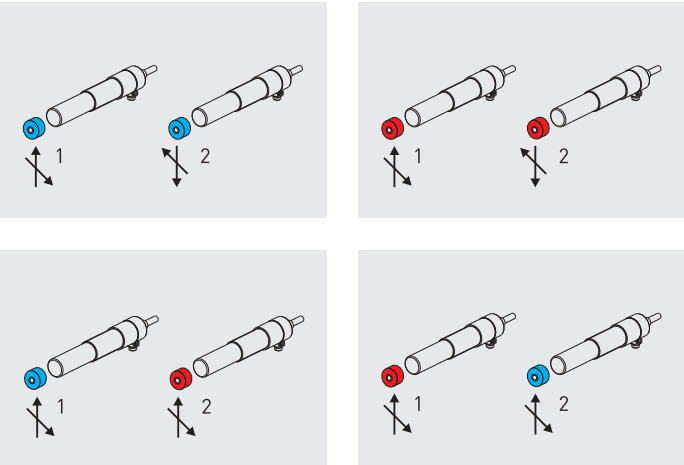

Magnetic sensors change-over contact, actuation from side

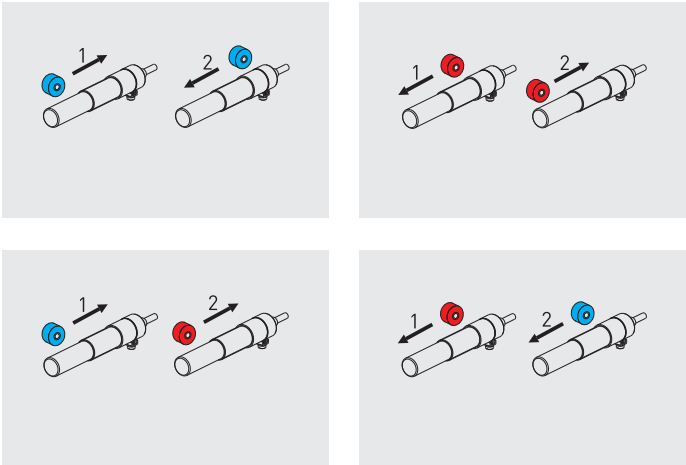

Magnetic sensors on a revolving door

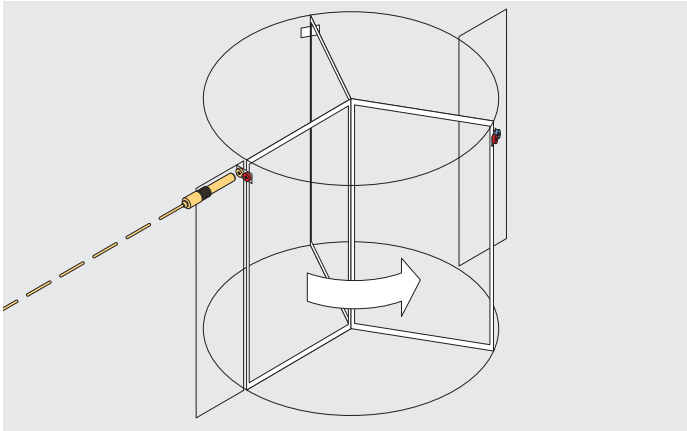

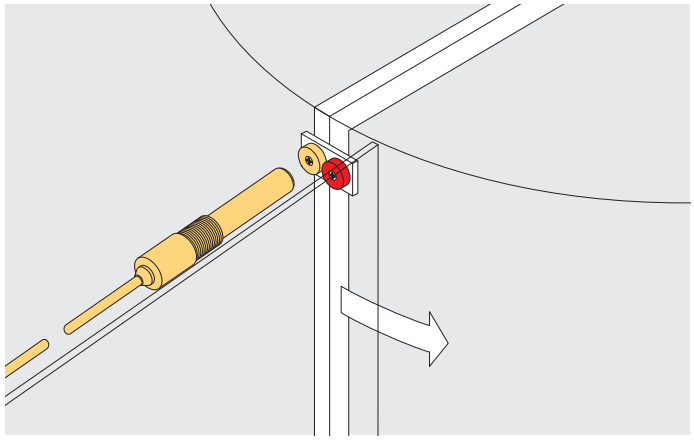

Features/Options
- Ex zone 1 and 21
- Brass enclosure, nickeled
- Long life
- 1 Reed contact
- Actuation from front
- Switching distance up to 25 mm depending on the actuating magnet
- With pre-wired cable, cable length 1 metre
- Special version only for gas Ex zone 2 and dust Ex zone 22 available

// EX RC 12

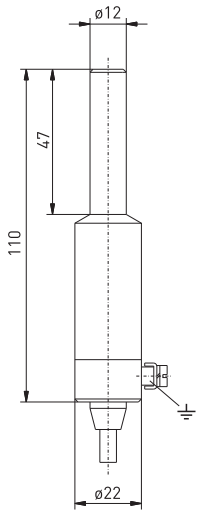

Technical data

Standards	EN 60947-5-2; EN 60079-0; EN 60079-18; EN 61241-0; EN 61241-1
Enclosure	brass, nickeled
Actuator	series M permanent magnet
Degree of protection	IP 67 according to EN 60529
Contact material	silver
Switching system	reed contacts
Contact types	NC contact, NO contact or change-over contact
Connection	cable, H05VV-F or Lapptherm 145
Cable section	1S, 1Ö: 3 x 0.75 mm^2, 1W: 4 x 0.75 mm^2
Cable length	1, 2 and 5 m
Switching voltage	250 V
Switching current	1,5 A
Switching capacity	1Ö, 1W: max. 50 VA/W, 1S: max. 100 VA/W
Utilisation category	AC-15, DC-13
Bounce duration	0.3 ... 0.6 ms
Ambient temperat. Ta	H05VV-F: –20 °C ... +70 °C, on request: -40 °C ... +70 °C
Mechanical life	> 1 million operations
Electrical life	10^6 ... 10^9 operations
Resistance to vibrations	1S: 50 ... 100 g, 1Ö, 1W: 10 ... 50 g
Ex marking	Ⓔx II 2G Ex mb II T6, II 2D Ex tD A21 IP67 T80°C IECEx Ex mb II T6, Ex tD A21 IP67 T80°C
Approvals	DMT 01 ATEX E 058 X, IECEx BVS 07.0007 X

Contact variants: switch travel/contacts

	actuation from front
1 change-over	Ex RC 12 1W BN → BK, BU
1 NC contact	Ex RC 12 1Ö BU → BN
1 NO contact	Ex RC 12 1S BU → BN

Type code

Ex RC 12 1W-3G/D

- Equipment Categ. 3G/D, Ex Zone 2 and 22
- 1 change-over (1Ö, 1S)
- Enclosure diameter 12 mm
- Series
- Ex certified component

Features/Options
- Version for low temperatures up to -40 °C with Lapptherm 145 cable available

Actuating distances

Actuating direction	from front		from front		from front	
Switch travel	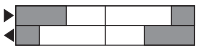				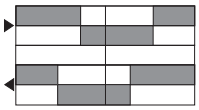	
Contacts	1 NC contact		1 NO contact		1 change-over contact	
Actuating direction	N or S		N or S		N or S	
Actuating magnet	Switching distance [mm]		Switching distance [mm]		Switching distance [mm]	
	on	off	on	off	on	off
M 50 U	4	7	–	–	4	7
M 100	10	13	3	11	10	13
M 100 U	10	13	3	11	10	13
M 200	13	16	7	17	13	16
M 200 U	13	16	7	17	13	16
M 300	17	20	10	24	17	20
M 300 U	17	20	10	24	17	20
M 400 U	33	37	28	43	33	37
M 700	30	35	25	40	30	35

Features/Options
- Ex zone 1 and 21
- Brass enclosure, nickeled
- Long life
- 1 Reed contact
- Actuation from front
- Switching distance up to 30 mm depending on the actuating magnet
- With pre-wired cable, cable length 1 metre
- Special version only for gas Ex zone 2 and dust Ex zone 22 available

// EX RC 13,5

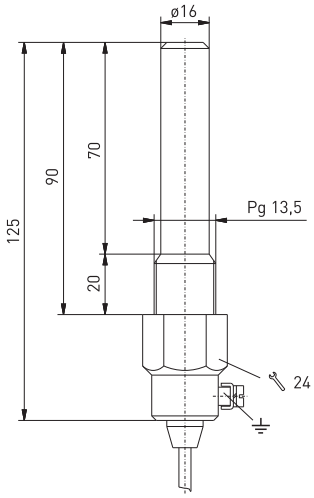

Technical data

Standards	EN 60947-5-2; EN 60079-0; EN 60079-18; EN 61241-0; EN 61241-1
Enclosure	brass, nickeled
Actuator	series M permanent magnet
Degree of protection	IP 67 according to EN 60529
Contact material	silver
Switching system	reed contacts
Contact types	NC contact, NO contact or change-over contact
Connection	cable, H05VV-F or Lapptherm 145
Cable section	1S, 1Ö: 3 x 0.75 mm^2, 1W: 4 x 0.75 mm^2
Cable length	1, 2 and 5 m
Switching voltage	250 V
Switching current	1.5 A
Switching capacity	1Ö, 1W: max. 50 VA/W, 1S: max. 100 VA/W
Utilisation category	AC-15, DC-13
Bounce duration	0.3 ... 0.6 ms
Ambient temperat. Ta	H05VV-F: –20 °C ... +70 °C, on request: -40 °C ... +70 °C
Mechanical life	> 1 million operations
Electrical life	10^6 ... 10^9 operations
Resistance to vibrations	1S: 50 ... 100 g, 1Ö, 1W: 10 ... 50 g
Ex marking	Ⓔx II 2G Ex mb II T6, II 2D Ex tD A21 IP67 T80°C IECEx Ex mb II T6, Ex tD A21 IP67 T80°C
Approvals	DMT 01 ATEX E 058 X, IECEx BVS 07.0007 X

Contact variants: switch travel/contacts

	actuation from front
1 NC contact	Ex RC 13,5 1Ö BU ⟶ BN
1 NO contact	Ex RC 13,5 1S BU ⟶ BN
1 change-over	Ex RC 13,5 1W BN ⟶ BK, BU

Type code

Ex RC 13,5 1W-3G/D

- Equipment Categ. 3G/D, Ex Zone 2 and 22
- 1 change-over, (1S, 1Ö)
- Enclosure diameter Pg 13,5: 16 mm
- Series
- Ex certified component

Features/Options
- Version for low temperatures up to -40 °C with Lapptherm 145 cable available

Actuating distances

Actuating direction	from front		from front		from front	
Switch travel	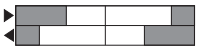				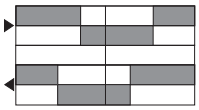	
Contacts	1 NC contact		1 NO contact		1 change-over contact	
Actuating direction	N or S		N or S		N or S	
Actuating magnet	Switching distance [mm]		Switching distance [mm]		Switching distance [mm]	
	on	off	on	off	on	off
M 50 U	4	7	–	–	4	7
M 100	10	13	3	11	10	13
M 100 U	10	13	3	11	10	13
M 200	13	16	7	17	13	16
M 200 U	13	16	7	17	13	16
M 300	17	20	10	24	17	20
M 300 U	17	20	10	24	17	20
M 400 U	33	37	28	43	33	37
M 700	30	35	25	40	30	35

Features/Options
- Ex zone 1 and 21
- Brass enclosure, nickeled
- Long life
- 1 Reed contact
- Actuation from front
- Switching distance up to 30 mm depending on the actuating magnet
- With pre-wired cable, cable length 1 metre
- Special version only for gas Ex zone 2 and dust Ex zone 22 available

// EX RC 15

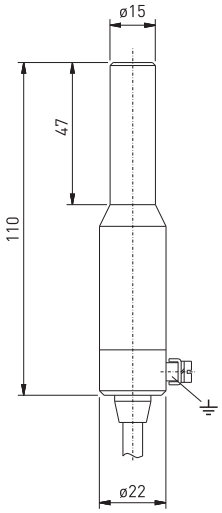

Technical data

Standards	EN 60947-5-2; EN 60079-0; EN 60079-18; EN 61241-0; EN 61241-1
Enclosure	brass, nickeled
Actuator	series M permanent magnet
Degree of protection	IP 67 according to EN 60529
Contact material	silver
Switching system	reed contacts
Contact types	NC contact, NO contact or change-over contact
Connection	cable, H05VV-F or Lapptherm 145
Cable section	1S, 1Ö: 3 x 0.75 mm^2, 1W: 4 x 0.75 mm^2
Cable length	1, 2 and 5 m
Switching voltage	250 V
Switching current	1.5 A
Switching capacity	1Ö, 1W: max. 50 VA/W, 1S: max. 100 VA/W
Utilisation category	AC-15, DC-13
Bounce duration	0.3 ... 0.6 ms
Ambient temperat. Ta	H05VV-F: –20 °C ... +70 °C, on request: -40 °C ... +70 °C
Mechanical life	> 1 million operations
Electrical life	10^6 ... 10^9 operations
Resistance to vibrations	1S: 50 ... 100 g, 1Ö, 1W: 10 ... 50 g
Ex marking	Ⓔx II 2G Ex mb II T6, II 2D Ex tD A21 IP67 T80°C IECEx Ex mb II T6, Ex tD A21 IP67 T80°C
Approvals	DMT 01 ATEX E 058 X, IECEx BVS 07.0007 X

Contact variants: switch travel/contacts

	actuation from front
1 NC contact	Ex RC 15 1Ö BU ⟶ BN
1 NO contact	Ex RC 15 1S BU ⟶ BN
1 change-over	Ex RC 15 1W BN ⟶ BK, BU

Type code

Ex RC 15 1W-3G/D

- Equipment Categ. 3G/D, Ex Zone 2 and 22
- 1 change-over, (1S, 1Ö)
- Enclosure diameter 15 mm
- Series
- Ex certified component

Features/Options
- Version for low temperatures up to -40 °C with Lapptherm 145 cable available

Actuating distances

Actuating direction	from front		from front		from front	
Switch travel	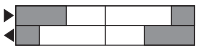				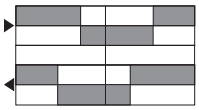	
Contacts	1 NC contact		1 NO contact		1 change-over contact	
Actuating direction	N or S		N or S		N or S	
Actuating magnet	Switching distance [mm]		Switching distance [mm]		Switching distance [mm]	
	on	off	on	off	on	off
M 50 U	4	7	–	–	4	7
M 100	10	13	3	11	10	13
M 100 U	10	13	3	11	10	13
M 200	13	16	7	17	13	16
M 200 U	13	16	7	17	13	16
M 300	17	20	10	24	17	20
M 300 U	17	20	10	24	17	20
M 400 U	33	37	28	43	33	37
M 700	30	35	25	40	30	35

Features/Options
- Ex zone 1 and 21
- Brass enclosure, nickeled, availble in stainless steel
- Including 2 mounting nuts
- 1 Reed contact
- Actuation from front, from side only with bistable contact
- Switching distance up to 30 mm depending on the actuating magnet
- With pre-wired cable, cable length 1 metre
- Special version only for gas Ex zone 2 and dust Ex zone 22 available

// EX RC M20

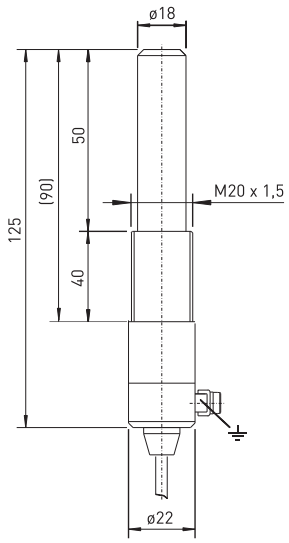

Technical data

Standards	EN 60947-5-2; EN 60079-0; EN 60079-18; EN 61241-0; EN 61241-1
Enclosure	brass, nickeled
Actuator	series M permanent magnet
Degree of protection	IP 67 according to EN 60529
Contact material	silver
Switching system	reed contacts
Switching elements	NO contact or change-over, bistable contact or bistable change-over contact
Connection	cable, H05VV-F or Lapptherm 145
Cable section	1S, 1Sr: 3 x 0.75 mm^2, 1W, 1Wr: 4 x 0.75 mm^2
Cable length	1, 2 and 5 m
Switching voltage	250 V
Switching current	1.5 A
Switching capacity	1W, 1Wr: max. 50 VA/W, 1S, 1Sr: max. 100 VA/W
Utilisation category	AC-15, DC-13
Bounce duration	0.3 ... 0.6 ms
Ambient temperat. Ta	H05VV-F: –20 °C ... +70 °C, on request: -40 °C ... +70 °C
Mechanical life	> 1 million operations
Electrical life	10^6 ... 10^9 operations
Resistance to vibrations	1S: 50 ... 100 g, 1Ö, 1W: 10 ... 50 g
Ex marking	Ⓔx II 2G Ex mb II T6, II 2D Ex tD A21 IP67 T80°C IECEx Ex mb II T6, Ex tD A21 IP67 T80°C
Approvals	DMT 01 ATEX E 058 X, IECEx BVS 07.0007 X

Contact variants: switch travel/contacts

	actuation from front	actuation from side
1 NO contact	Ex RC M20 1S BU — BN	
1 bistable contact	Ex RC M20 1Sr BU — BN	Ex RC M20 1Sr BU — BN
1 change-over	Ex RC M20 1W BN — BK, BU	
1 change-over bistable	Ex RC M20 1Wr BN — BK, BU	Ex RC M20 1Wr BN — BK, BU

Type code

Ex RC M20 1W-B-3G/D

- Equipment Categ. 3G/D, Ex Zone 2 and 22
- B Tapped bushing M16 x 1.5
- 1 change-over, (1S, 1Sr, 1Wr)
- Enclosure diameter 18 mm, mounting thread M20 x 1.5
- Series
- Ex certified component

Features/Options

- Ex RC M20-B, variant with tapped bushing M16 x 1.5
- Version for low temperatures up to -40 °C with Lapptherm 145 cable available

// Tapped bushing B

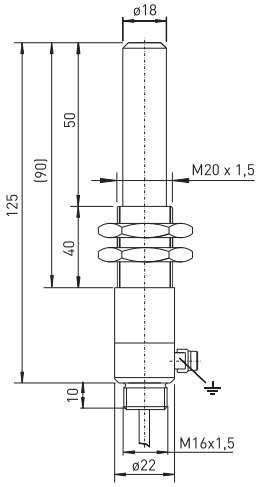

Actuating distances

Actuating direction	from front		from front		from front	
Switch travel	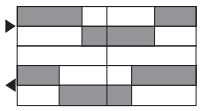				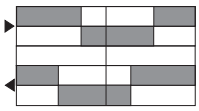	
Contacts	1 change-over contact		1 bistable contact		1 change-over contact bistable	
Actuating direction	N or S		N/S		N/S	
Actuating magnet	**Switching distance [mm]**		**Switching distance [mm]**		**Switching distance [mm]**	
	on	**off**	**on**	**off**	**on**	**off**
M 50 U	4	7	12	6	–	–
M 100	10	13	22	12	20	40
M 100 U	10	13	22	12	20	40
M 200	13	16	30	30	25	50
M 200 U	13	16	30	30	25	50
M 300	17	20	37	23	30	60
M 300 U	17	20	37	23	30	60
M 400 U	33	37	63	43	50	90
M 700	30	35	60	40	50	75

Actuating direction	from side		from side	
Switch travel			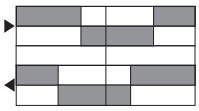	
Contacts	1 bistable contact		1 change-over contact bistable	
Actuating direction	N or S		N or S	
Actuating magnet	**Switching distance [mm]**		**Switching distance [mm]**	
	on	**off**	**on**	**off**
M 50 U			–	–
M 100			15	20
M 100 U			15	20
M 200			20	25
M 200 U			20	25
M 300			25	30
M 300 U			25	30
M 400 U			30	35
M 700			40	50

Features/Options
M 50 N U, M 100 N U, M 200 N U
- Not encapsulated
- Barium ferrite
- Ambient temperature: –20 °C ... +80 °C

Features/Options
M 100 S, M 100 N, M 200 S
- Thermoplastic enclosure polyamide 6.6, blue S or red N
- Barium ferrite
- Ambient temperature: –20 °C ... +80 °C

// Actuator M 50 N U

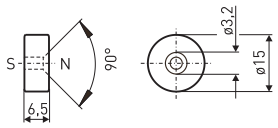

// Actuator M 100 N U

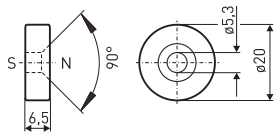

// Actuator M 100 S

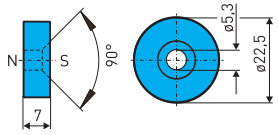

// Actuator M 100 N

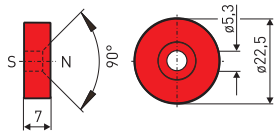

// Actuator M 200 N U

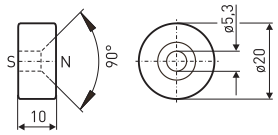

// Actuator M 200 S

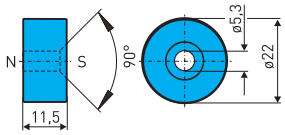

Features/Options
M 300 N U, M 300 U B, M 400 N U
- Not encapsulated
- M 300 U: North pole with colour marking (red dot)
- Barium ferrite
- Ambient temperature: –20 °C ... +80 °C

Features/Options
M 200 N, M 300 S, M 300 N
- Thermoplastic enclosure polyamide 6.6, blue S or red N
- Barium ferrite
- Ambient temperature: –20 °C ... +80 °C

// Actuator M 200 N

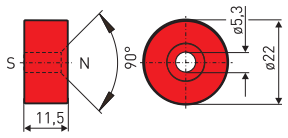

// Actuator M 300 N U

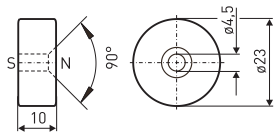

// Actuator M 300 U B

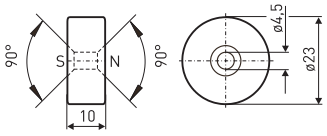

// Actuator M 300 S

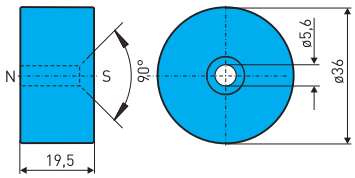

// Actuator M 300 N

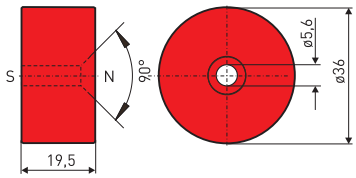

// Actuator M 400 N U

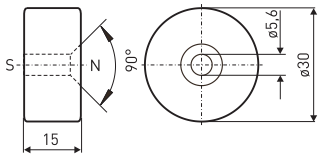

Features/Options
M 400 U B
- Not encapsulated
- Barium ferrite
- Ambient temperature: –20 °C ... +80 °C

Features/Options
M 700 S, M 700 N
- Thermoplastic enclosure polyamide 6.6, blue S or red N
- Barium ferrite
- Ambient temperature: –20 °C ... +80 °C

// Actuating magnet M 400 U B

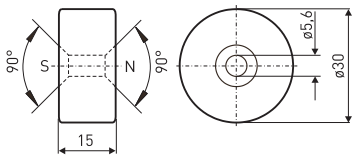

// Actuator M 700 S

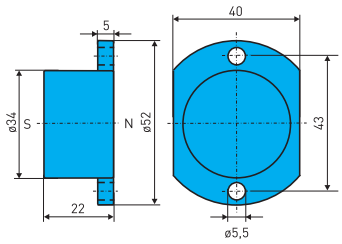

// Actuating magnet M 700 N

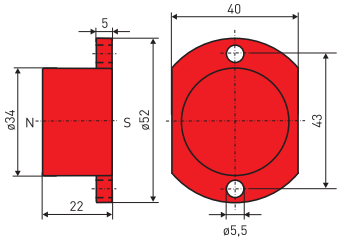


steute
Ex IS M18 b
032905

Ex inductive sensors

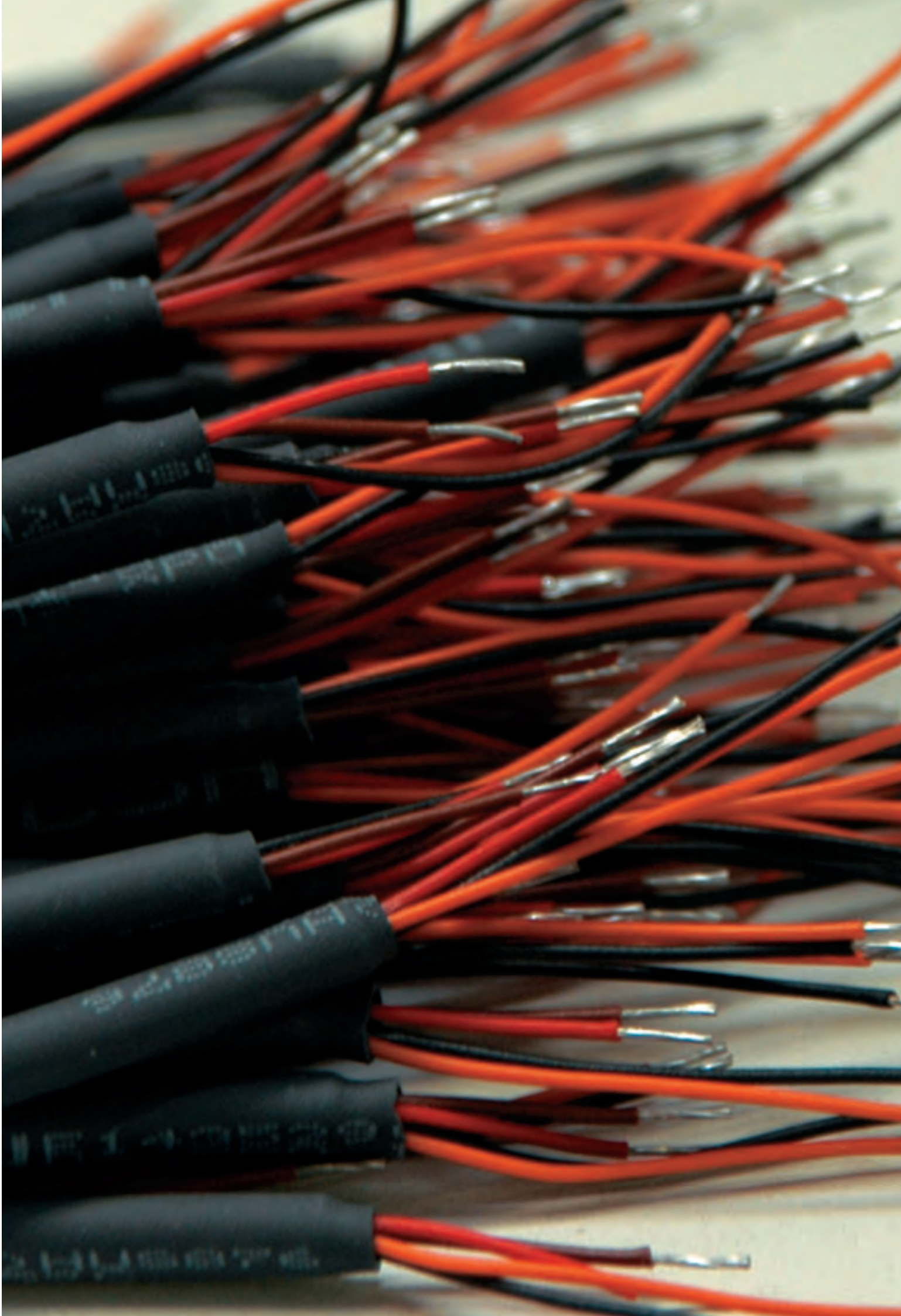

Range of application

Ex inductive sensors are suitable for the positioning and controlling of machines and systems in many areas with explosive endangered industrial applications.

They are generally used as an alternative to mechanically operated limit switches in cases where unfavourable operating conditions, such as high or low actuating speeds, large switching frequencies, extreme dirt or dust production, high humidity, chemical atmospheres, highly fluctuating actuating distances, etc., occur. Even in the presence of aggressive materials, safe switching is ensured through encapsulation of the contacts.

Design and mode of operation

The Ex inductive sensors change their current consumption or their internal resistance with the approach of metal to the sensor surface. As output signals the changed current or the changed internal resistance are available.

The degree of protection IP 67 even permits safe application under rough ambient conditions. In addition, Ex inductive sensors are available with plug-in connectors for equipment category 3D, dust Ex zone 22.

The Ex IS M12/M18/M30 range is offered as a complete system with a relay module. The relay module, which is suitable for cabinet mounting, supplies the required intrinsic power for the sensor and transmits the sensor signal. The function of the input circuit can be programmed as NO or NC contact.

The LEDs of the Ex RM 1W 1 relay module indicate the operational condition of the sensor, as well as possible malfunctions such as wire breakages and short-circuits.

All Ex inductive sensors shown in this chapter bear the CE mark according to the EMC Directive 2004/108/EC and according to ATEX 94/9/EC. The Ex safety switches for hinged guards per equipment category 3D bear the CE mark without the number of the notified body and have received a CE declaration of manufacturer conformity.

Anwendung

Ex inductive sensors for standstill monitoring

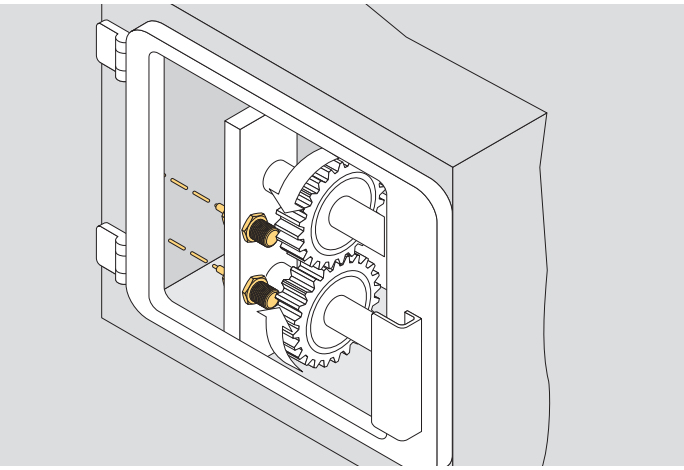

Features/Options
- Ex zone 0 and 20
- Metal enclosure
- Variants for flush or non-flush mounting
- Long life, no mechanical wear
- Suitable for the food processing industry
- Insensitive to soiling
- Enclosure diameter M12 x 1

// EX IS M12 B

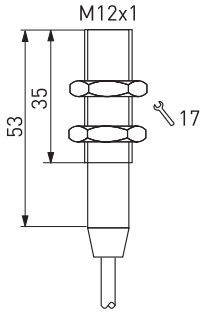

Technical data

Standards	EN 60947-5-2; EN 50014; EN 50020; EN 50284; EN 50281-1-1
Enclosure	brass-nickel, PA
Nuts	2, brass-nickel
Switching system	namur per DIN EN 60947-5-6
Connection	2 m pre-wired cable PVC 2 x 0.5 mm^2
Degree of protection	IP 67 to EN 60529
Switching distance s_n	Ex IS M12 b: 2 mm, Ex IS M12 nb: 4 mm
Switching distance in %	steel St 37: 100 %, stainless steel: 70 %, brass: 50 %, copper: 45 %, aluminium: 40 %
Input power P_i	max. 50 mW
Input voltage U_i	max. 12.6 VDC
Input current I_i	max. 15.9 mA
Tightening torque for the nuts	M12 x 1: 10 Nm
Ambient temperat. Ta	-25°C ... +75°C
Ex marking	Ⓔx II 1G Ex ia IIC T6, II 1D IP67 T100°C
Approvals	TÜV 06 ATEX 553179

Type code	Ex IS M12 NB

NB Non-flush, (B flush)
Enclosure diameter M12
Series
Ex certified component

Ex inductive sensors
// Series Ex IS M12, variants

Features/Options
- Other cable lengths on request: 5 or 10 m

// EX IS M12 NB

// EX IS M12 NB

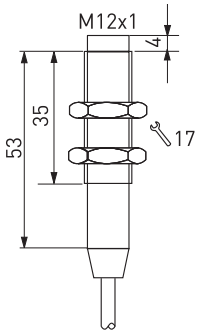

Features/Options
- Ex zone 22
- Metal enclosure
- Plug-in connector
- Variants for flush or non-flush mounting
- Long life, no mechanical wear
- Suitable for the food processing industry
- Insensitive to soiling
- Enclosure diameter M12 x 1

// EX IS M12 B-ST

Technical data

Standards	EN 60947-5-2; EN 50014; EN 50020; EN 50284; EN 50281-1-1
Enclosure	brass-nickel, PA
Nuts	2, brass-nickel
Switching system	namur per DIN EN 60947-5-6
Connection	plug-in connector M12 x 1, 4-pole
Degree of protection	IP 67 to EN 60529
Switching distance s_n	Ex IS M12 b: 2 mm, Ex IS M12 nb: 4 mm
Switching distance in %	steel St 37: 100 %, stainless steel: 70 %, brass: 50 %, copper: 45 %, aluminium: 40 %
Input power P_i	max. 50 mW
Input voltage U_i	max. 12.6 VDC
Input current I_i	max. 15.9 mA
Tightening torque for the nuts	M12 x 1: 10 Nm
Ambient temperat. Ta	-25°C ... +75°C
Ex marking	Ⓔx II 3D IP67 T80°C

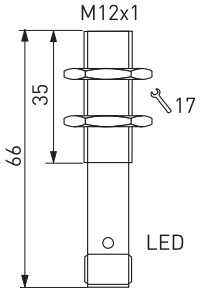

Type code	Ex IS M12 NB-ST-3D

- Equipment Category, 3D, dust Ex zone 22
- ST Plug-in connector M12 X1
- NB Non-flush, (B flush)
- Enclosure diameter M12
- Series
- Ex certified component

Features/Options
- 3D version with plug-in connector M12 x 1, 4-pole and integrated LED
- Lock for plug-in connector STESI-M12 available

// EX IS M12 NB-ST-3D

// EX IS M12 NB-ST-3D

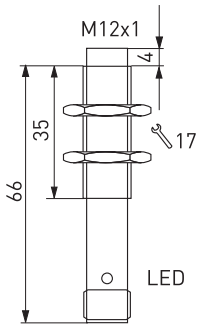

Features/Options
- Ex zone 0 and 20
- Metal enclosure
- Variants for flush or non-flush mounting
- Long life, no mechanical wear
- Suitable for the food processing industry
- Insensitive to soiling
- Enclosure diameter M18 x 1

// EX IS M18 B

Technical data

Standards	EN 60947-5-2; EN 50014; EN 50020; EN 50284; EN 50281-1-1
Enclosure	brass-nickel, PA
Nuts	2, brass-nickel
Switching system	namur per DIN EN 60947-5-6
Connection	2 m pre-wired cable PVC 2 x 0.5 mm^2
Degree of protection	IP 67 to EN 60529
Switching distance s_n	Ex IS M18 b: 5 mm, Ex IS M18 nb: 8 mm
Switching distance in %	steel St 37: 100 %, stainless steel: 70 %, brass: 50 %, copper: 45 %, aluminium: 40 %
Input power P_i	max. 50 mW
Input voltage U_i	max. 12.6 VDC
Input current I_i	max. 15.9 mA
Tightening torque for the nuts	M18 x 1: 36 Nm
Ambient temperat. Ta	-25°C ... +75°C
Ex marking	Ⓔx II 1G Ex ia IIC T6, II 1D IP67 T100°C
Approvals	TÜV 06 ATEX 553179

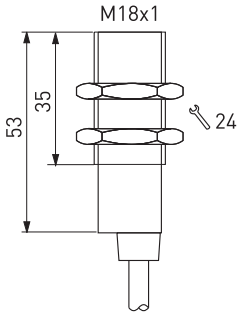

Type code	Ex IS M18 NB

NB Non-flush, (B flush)
Enclosure diameter M18
Series
Ex certified component

Ex inductive sensors
// Series Ex IS M18, variants

Features/Options
- Other cable lengths on request: 5 or 10 m

// EX IS M18 NB

// EX IS M18 NB

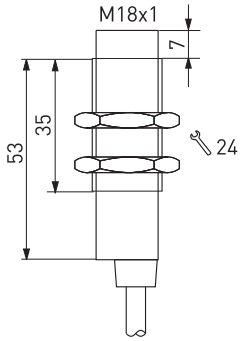

Features/Options
- Ex zone 22
- Metal enclosure
- Plug-in connector
- Variants for flush or non-flush mounting
- Long life, no mechanical wear
- Suitable for the food processing industry
- Insensitive to soiling
- Enclosure diameter M18 x 1

// EX IS M18 B-ST

Technical data

Standards	EN 60947-5-2; EN 50014; EN 50020; EN 50284; EN 50281-1-1
Enclosure	brass-nickel, PA
Nuts	2, brass-nickel
Switching system	namur per DIN EN 60947-5-6
Connection	plug-in connector M12 x 1, 4-pole
Degree of protection	IP 67 to EN 60529
Switching distance s_n	Ex IS M18 b: 5 mm, Ex IS M18 nb: 8 mm
Switching distance in %	steel St 37: 100 %, stainless steel: 70 %, brass: 50 %, copper: 45 %, aluminium: 40 %
Input power P_i	max. 50 mW
Input voltage U_i	max. 12.6 VDC
Input current I_i	max. 15.9 mA
Tightening torque for the nuts	M18 x 1: 36 Nm
Ambient temperat. Ta	-25°C ... +75°C
Ex marking	Ⓔx II 3D IP67 T80°C

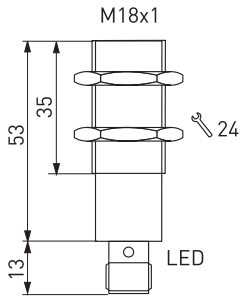

Type code	Ex IS M18 NB-ST-3D

- 3D: Equipment Category, 3D, dust Ex zone 22
- ST: Plug-in connector M12 x 1
- NB: Non-flush, (B flush)
- M18: Enclosure diameter M18
- IS: Series
- Ex: Ex certified component

Features/Options
- 3D version with plug-in connector M12 x 1, 4-pole and integrated LED
- Lock for plug-in connector STESI-M12 available

// EX IS M18 NB-ST-3D

// EX IS M30 NB-ST-3D

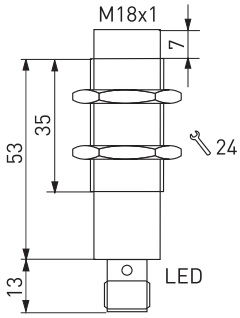

Features/Options
- Ex zone 0 and 20
- Metal enclosure
- Variants for flush or non-flush mounting
- Long life, no mechanical wear
- Suitable for the food processing industry
- Insensitive to soiling
- Enclosure diameter M30 x 1.5

// EX IS M30 B

Technical data

Standards	EN 60947-5-2; EN 50014; EN 50020; EN 50284; EN 50281-1-1
Enclosure	brass-nickel, PA
Nuts	2, brass-nickel
Switching system	namur per DIN EN 60947-5-6
Connection	2 m pre-wired cable PVC 2 x 0.5 mm^2
Degree of protection	IP 67 to EN 60529
Switching distance s_n	Ex IS M30 b: 10 mm, Ex IS M30 nb: 15 mm
Switching distance in %	steel St 37: 100 %, stainless steel: 70 %, brass: 50 %, copper: 45 %, aluminium: 40 %
Input power P_i	max. 50 mW
Input voltage U_i	max. 12.6 VDC
Input current I_i	max. 15.9 mA
Tightening torque for the nuts	M30 x 1,5: 100 Nm
Ambient temperat. Ta	-25°C ... +75°C
Ex marking	Ⓔx II 1G Ex ia IIC T6, II 1D IP67 T100°C
Approvals	TÜV 06 ATEX 553179

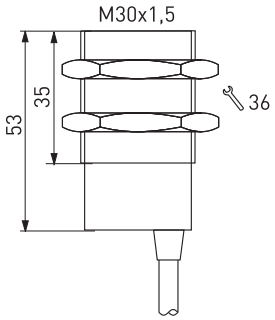

Type code	Ex IS M30 NB

NB Non-flush, (B flush)
Enclosure diameter M30
Series
Ex certified component

Ex inductive sensors
// Series Ex IS M30, variants

Features/Options
- Other cable lengths on request: 5 or 10 m

// EX IS M30 NB

// EX IS M30 NB

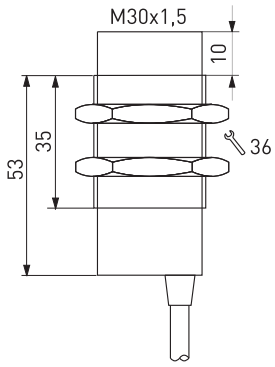

Features/Options
- Ex zone 22
- Metal enclosure
- Plug-in connector
- Variants for flush or non-flush mounting
- Long life, no mechanical wear
- Suitable for the food processing industry
- Insensitive to soiling
- Enclosure diameter M30 x 1.5

// EX IS M30 B-ST

Technical data

Standards	EN 60947-5-2; EN 50014; EN 50020; EN 50284; EN 50281-1-1
Enclosure	brass-nickel, PA
Nuts	2, brass-nickel
Switching system	namur per DIN EN 60947-5-6
Connection	plug-in connector M12 x 1, 4-pole
Degree of protection	IP 67 to EN 60529
Switching distance s_n	Ex IS M30 b: 10 mm, Ex IS M30 nb: 15 mm
Switching distance in %	steel St 37: 100 %, stainless steel: 70 %, brass: 50 %, copper: 45 %, aluminium: 40 %
Input power P_i	max. 50 mW
Input voltage U_i	max. 12.6 VDC
Input current I_i	max. 15.9 mA
Tightening torque for the nuts	M30 x 1,5: 100 Nm
Ambient temperat. Ta	-25°C ... +75°C
Ex marking	Ⓔx II 3D IP67 T80°C

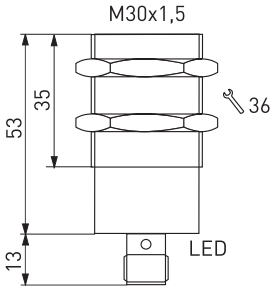

Type code	Ex IS M30 NB-ST-3D

- Equipment Category, 3D, dust Ex zone 22
- ST Plug-in connector M12 x 1
- NB Non-flush, (B flush)
- Enclosure diameter M30
- Series
- Ex certified component

Features/Options
- 3D version with plug-in connector M12 x 1, 4-pole and integrated LED
- Lock for plug-in connector STESI-M12 available

// EX IS M30 NB-ST-3D

// EX IS M30 NB-ST-3D

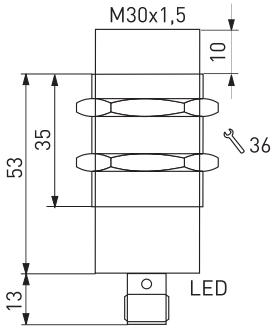

Ex Relay module
// Series Ex RM 1W 1

Features/Options
- Thermoplastic enclosure
- Output: Relay
- 40 mm housing width
- 24 VDC or 230 VAC operating voltage

// EX RM 1W 1

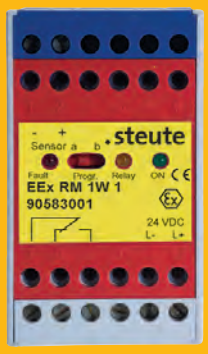

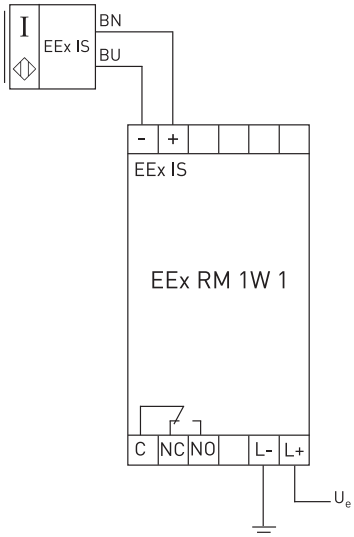

Technical data

Standards	EN 60947-5-2; EN 50014; EN 50020
Enclosure	thermoplastic, PA
Dimensions	40 x 70 x 110 mm (BxHxT)
Mounting	DIN rail mounting per DIN EN 50022
Connection	screw clamps
Degree of protection	IP 20 to EN 60529
Rated operating voltage U_e	24 VDC ±15%, 230 VAC +10/-15%
Power consumption	1.8 W, 1.5 VA
Output power P_o	max. 50 mW
Output voltage U_o	max. 12.6 VDC
Output current I_o	max. 15.9 mA
Output	relay: change-over contact
Switching voltage	250 VAC/24 VDC
Switching current	4 A, cos φ > 0.7
Display	LEDs, red: wire-break and short-circuits, yellow: relay pulled, green: operating voltage
Ambient temperat. Ta	-20°C ... +60°C
Ex marking	Ⓔx II (1)GD [Ex ia] IIC
Approvals	TÜV 06 ATEX 553146

Type code	Ex RM 1W 1

1 input
Relay output: 1 change-over contact
Series
Ex certified component

Features/options
- Ex zone 1 and 2, as well as 21 and 22
- Polyester resin enclosure
- Versions with different dimensions available
- PU foam gaskets

// EX AD 85

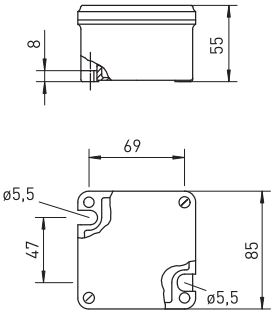

Technical Data

Standards	IEC/EN 60079-0, IEC/EN 60079-7, IEC/EN 60079-11, IEC 60079-18, IEC/EN 61241-0, IEC/EN 61241-1
Ex marking	Ex II 2G Ex em II T6, T5, T4; II 2D Ex tD A21 IP66 T80°C, T95°C Ex II 2G Ex ia/ib IIA, IIB, IIC T6, T5 II 2D Ex tD A21 IP66 T80°C, T95°C IECEx Ex em II T6, T5, T4 Ex tD A21 IP66 T80°C, T95°C, T130°C IECEx Ex ia/ib IIA, IIB, IIC T6, T5 Ex tD A21 IP66 T80°C, T95°C, T130°C
Enclosure	Polyester resin (glass fibre-reinforced)
Protection class	IP 66/67 per IEC 60529
Connection	hood-type or terminal blocks
Cable entry	max. 8 cable glands
Cable section	Ex AD 85 MK: max. 4 mm², Ex AD 115 MK: max. 6 mm² Ex AD 145 MK: max. 10 mm² (incl. conductor ferrules), single-wire
Cable entry	M20 x 1.5, M25 x 1.5 or M32 x 1.5
Temperature class	T6, T5, T4
U_e	max. 1100 V without fuse, max. 550 V with fuse
Rated operating current/voltage	Ex AD 85: 25 A/550 VAC, Ex AD 115: 32 A/750 VAC, Ex AD 145: 44 A/750 VAC
Ambient temperat. Ta	Ex e: - 20 °C...+ 55 °C, Ex i: - 20 °C...+ 75 °C, -50 °C with special cable glands
Permissible ambient temperature	T6: max. +40 °C, T5: max. +55 °C, T4: max. +60 °C
Approval	PTB 10 ATEX 1019X, IECEx in 2010

Type code **Ex AD 85 e MK4 3xM20**

- Cable gland size (M25, M32)
- Number of cable glands, max. 6
- Number of terminals, max. 8
- hood-type terminals (FK spring-force terminals)
- Method of protection (i)
- Series (115, 145)
- Junction/Terminal box
- Ex certified component

Acessories: Ex Junction and Terminal boxes
// Series Ex AD, variants

Features/Options
- All variants are available as junction or terminal box
- Method of protection e or i
- Junction box equipped with either 4, 5 or 8 hood-type terminals
  Ex AD 85 MK: 4 or 5, Ex AD 115: 5 or 8, Ex AD 145: 8
- Terminal box Ex AD FK equipped with max. 16 spring-force terminal blocks plus 2 PE/PA terminals
- Junction boxes equipped with different sizes of cable glands
  Ex AD 85 MK: 3 or 4 x M20 x 1.5,
  Ex AD 115 MK: 6 x M20 x 1.5, 4 or 6 M25 x 1.5,
  Ex AD 145 MK: 8 x M25 x 1.5 or 6 x M32 x 1.5
- Terminal boxes equipped with different sizes of cable glands
  Ex AD 85 FK: 3 x M20 x 1.5,
  Ex AD 115 FK: 3 x M25 x 1.5,
  Ex AD 145 FK: 4 x M25 x 1.5

// Ex AD 115

// Ex AD 115

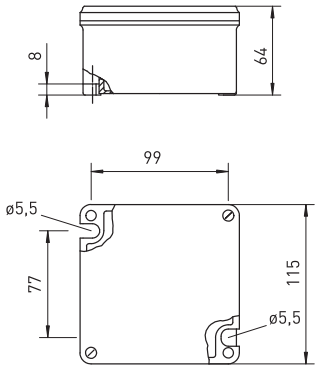

// Ex AD 145

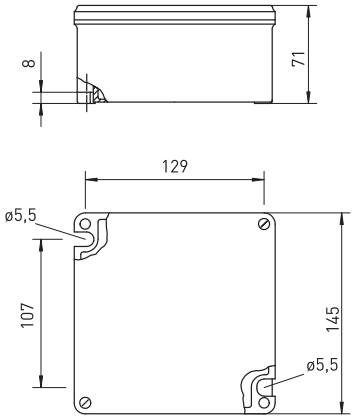

NOTES

LEGEND

Ex	Explosive protected to ATEX
	A/F
	Double insulated
	Positive break NC contact
P	Positive break travel/angle
L	Latching point
	Wire breakage detection
	Wire pull detection
	Actuated
	Not actuated
	Trade association type-tested
IECEx	Ex approval to IEC standards
	Ex approval for Brazil
	Ex approval for Russia
	Ex approval for China
CE	Directive-compliance, see Declaration of Conformity
I_e	Rated operating current
I_{the}	Thermal test current
U_e	Rated operating voltage
U_i	Rated insulation voltage
U_{imp}	Rated impulse withstand voltage

Explanation of switch travel diagrams

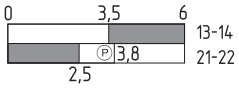

	Contact opened
	Contact closed

X1-X2	NC contact
X3-X4	NO contact
X5-X6	Contact overlapping

colour codes to DIN IEC 757

BK	black
BN	brown
BU	blue
GN	green
GY	grey
OG	orange
PK	pink
RD	red
TQ	turquoise
VI	violet
WH	white
YE	yellow

steute develops and manufactures safe switchgear for demanding and critical fields of application. Besides a comprehensive standard range of products for applications in Explosion Protection, Control Technology and Medical Equipment, we also and increasingly develop customised switchgear for extreme conditions in all three business fields. Some examples: emergency pull-wire switches for the mining industry, self-sufficient radio position switches for industrial automation and control panels for laser surgery. Our head office is in Löhne, Westphalia, Germany; worldwide sales are conducted by subsidiaries and trading partners.

steute
Schaltgeräte GmbH & Co. KG
Brückenstraße 91
32584 Löhne, Germany
Phone + 49 (0) 57 31 7 45-0
Fax + 49 (0) 57 31 7 45-200
E-mail info@steute.com
www.steute.com

01.26.0311/1157875/10.2010/1000 wd