Magnetic safety sensor
// RC Si 56 1Ö/1S - 1m - IP 69K Order no.: 25609101

Features/Options

- Thermoplastic enclosure
- Long life
- Reed contacts, coded
- Actuation from front
- Switching distance up to 7 mm
- With pre-wired cable
- Version with higher protection class IP 69K: suitable for cleaning with 80°C hot water at 100 bar pressure at a distance of 100 mm from different directions

Dimensions

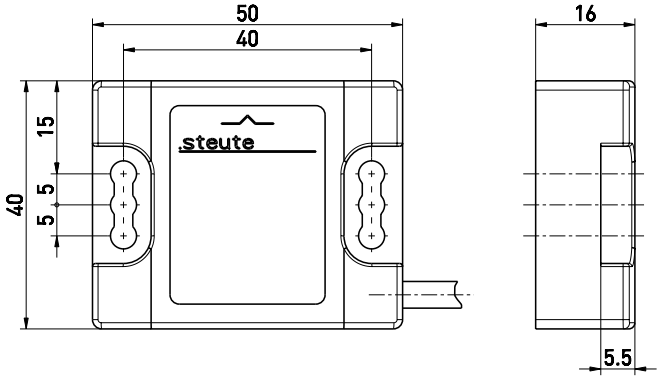

Contact diagram

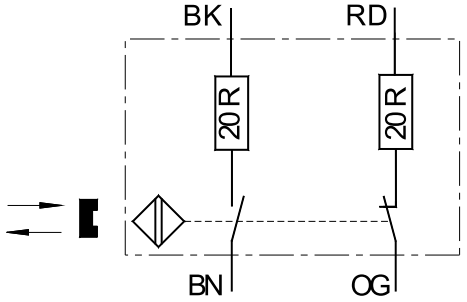

Axial Misalignment

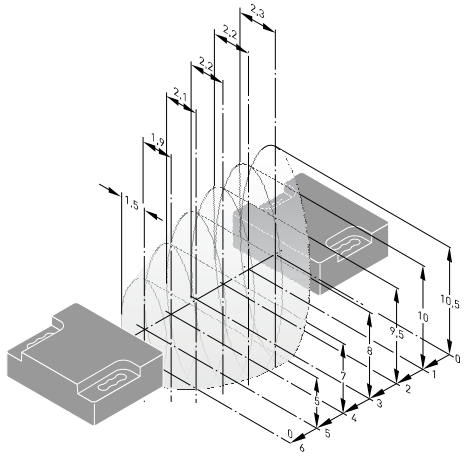

Technical data

Standards	EN ISO 13849-1; IEC/EN 60947-5-2; IEC/EN 60947-5-3/PDF-M*; EN 954-1; EN 1088
Enclosure	glass-fibre reinforced thermoplastic, self-extinguishing
Degree of protection	IP 69K to DIN 40050-9
Switching system	Reed contacts
Contact types	1 NC/1 NO contact
Connection	pre-wired cable 4 x AWG 24
Cable length	1 m
B_{10d} (10% Load)	1.000.000
T_M	max. 20 years
$MTTF_d$	> 100 years
U_e	max. 30 VDC
I_e	max. 157 mA DC
Voltage drop at I_{max}	2.5 V
Short-circuit current	max. 750 mA for 50 ms
Switching frequency	max. 5 Hz
Degree of protection	II
Ambient temperature	-20 °C ... +70 °C
Mechanical life	> 10 million operations
Repeatability	< 0.5 mm
Switching capacity	
s_{ao}	7 mm
s_{ar}	23 mm
	* is only achieved in combination with a safety module
Weight	65g

Errors and omissions excepted.

steute Schaltgeräte GmbH & Co. KG | Brückenstraße 91 32584 Löhne, Germany | Telefon +49 (0) 5731 745-0 Telefax +49 (0) 5731 745-200 | info@steute.com www.steute.com